TOWNSHIP 57 NORTH RANGE 71 WEST OF THE 6th PRINCIPAL MERIDIAN, WYOMING

CAMPBELL COUNTY

NO 1

STATUS OF PUBLIC DOMAIN
LAND AND MINERAL TITLES

MT PLAT
SUPPL Secs 1,11,12

INDEX TO SEGREGATED TRACTS				
RESURVEY	ORIGINAL SURVEY			
TRACT NO	T	R	SEC	SUBDIVISION

FOR ORDERS EFFECTING DISPOSAL OR USE OF UNIDENTIFIED LANDS WITHDRAWN FOR CLASSIFICATION, MINERALS, WATER AND/OR OTHER PUBLIC PURPOSES, REFER TO INDEX OF MISCELLANEOUS DOCUMENTS.

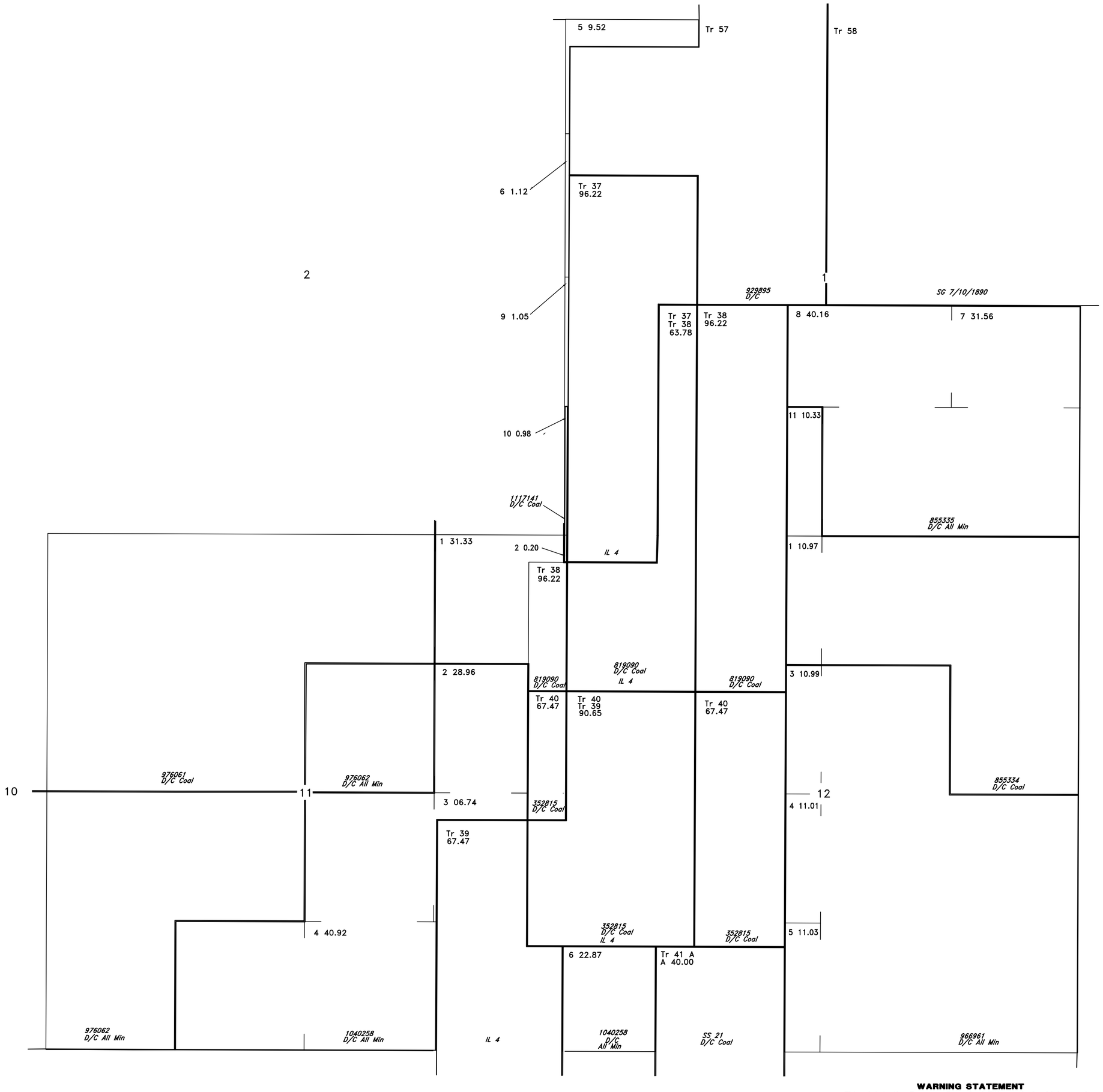

WARNING STATEMENT

This plat is the Bureau's Record of Title, and should be used only as a graphic display of the township survey data. Records hereon do not reflect title changes which may have been effected by lateral movements of rivers or other bodies of water. Refer to the cadastral surveys for official survey information.

CURRENT TO	BY

Updated	*06/02/2006 dls*

6th Prin Mer
T. 57N
R. 71W
NO 1