TOWNSHIP 43 NORTH RANGE 76 WEST OF THE 6th PRINCIPAL MERIDIAN, WYOMING

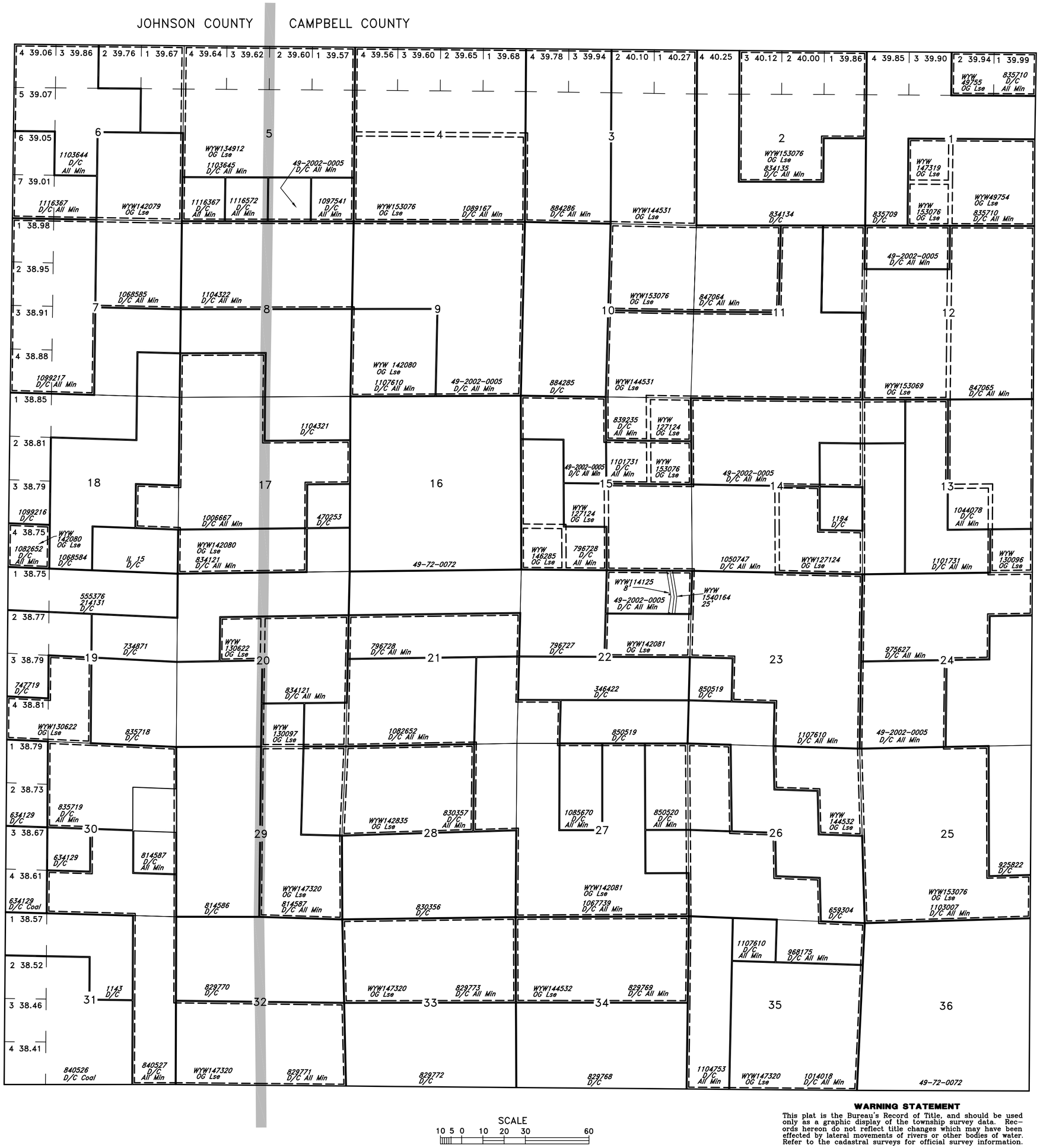

SCALE
10 5 0 10 20 30 60
chains

WARNING STATEMENT

This plat is the Bureau's Record of Title, and should be used only as a graphic display of the township survey data. Records hereon do not reflect title changes which may have been effected by lateral movements of rivers or other bodies of water. Refer to the cadastral surveys for official survey information.

STATUS OF PUBLIC DOMAIN
LAND AND MINERAL TITLES

OG PLAT

INDEX TO SEGREGATED TRACTS				
RESURVEY	ORIGINAL SURVEY			
TRACT NO	T	R	SEC	SUBDIVISION

FOR ORDERS EFFECTING DISPOSAL OR USE OF UNIDENTIFIED LANDS WITHDRAWN FOR CLASSIFICATION, MINERALS, WATER AND/OR OTHER PUBLIC PURPOSES, REFER TO INDEX OF MISCELLANEOUS DOCUMENTS.

Some resurveyed lots shown on private land apply to federal mineral ownership only.

Complete status information can only be obtained through use of all plats and HI pages

KGS, Collins Field
Sec 36: S2SW, SWSE

KGS, Jepson Draw Field
Sec 7: Lots 1–4, E2W2
Sec 18: Lots 1–4, E2W2, SE
Sec 19: All

KGS, Pumpkin Buttes Field
Sec 1: All
Sec 2: Lots 1–4, S2N2, SE
Sec 12: N2, SE

CA WYW110911
Sec 1: NE

Lands within this T & R are included in the boundary of the Pumpkin Buttes (Shannon) OG Unit. Ref WYW150202X for a complete legal description.

The lands in patent 49–2002–0005, are temporarily closed to mineral location. See 43C 3809.2 for further information regarding the disposition of minerals reserved under Sec. 203/206 of FLPMA, or the R&PP Act, as amended.

CA WYW156611
Sec 2: W2SE

CURRENT TO	BY

Updated	4/11/2006 rhl

6th Prin Mer
T. 43N
R. 76W