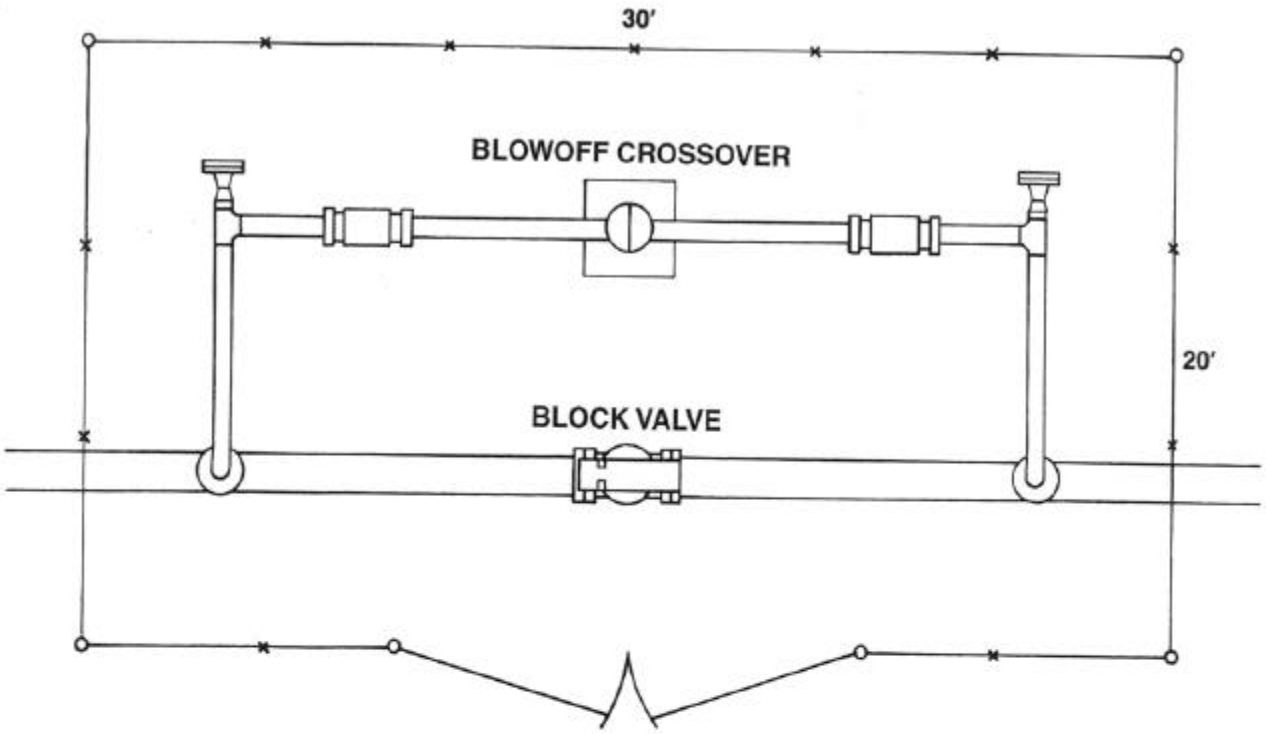

PLAN

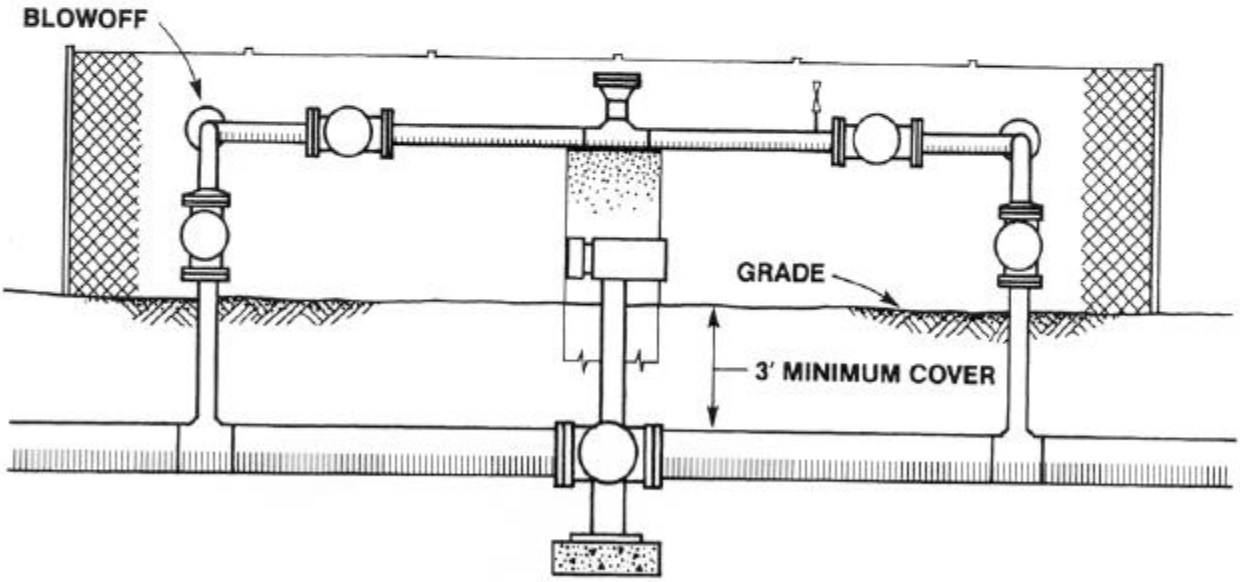

ELEVATION

Not To Scale

PETRO SOURCE CO_2 PIPELINE PROJECT

Figure 2-4

Typical Block Valve Configuration