APPENDIX H

DIVERSION DITCH

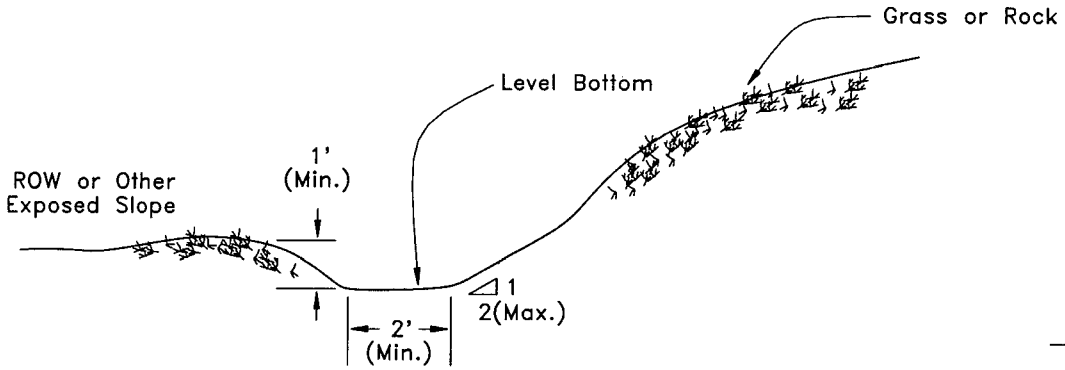

Bottom Width: 2 Feet Minimum; The Bottom Width Shall be Level

Depth: 1 Foot Minimum

Side Slope: 2:1 Maximum

Grade: Maximum 5 Percent, with Positive Drainage to a Suitable Stabilized Outlet

DIVERSION DIKE

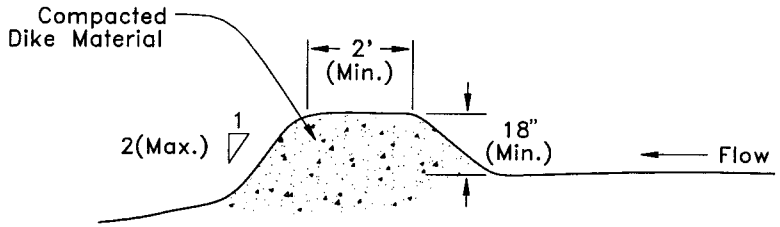

NOTE: Typically used on the top of slopes to divert runoff away from the slope face below.

These structures can also be used to direct runoff from the right-of-way away from streams, wetlands and adjacent properties and may be constructed parallel to the right-of-way.

APPENDIX H
Typical Diversion Ditch
and Diversion Dike

APPENDIX H
Sediment Control
in Ditches

PLAN VIEW

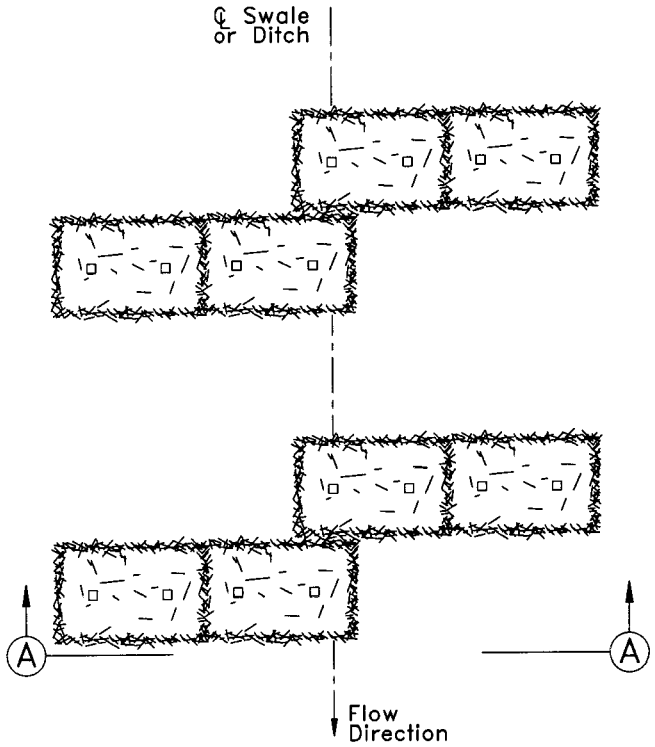

SECTION A–A

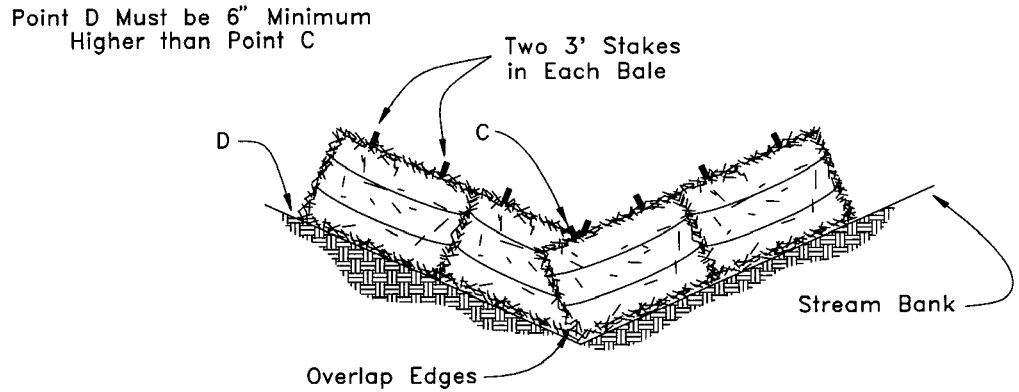

NOTES

- Embed bales 4 to 6 inches.
- Drive stakes minimum 12" into ground surface.
- Silt Fence Fabric may be used.
- See Typical Drawings for installation of Straw Bale or Silt Fence Sediment Barriers.

STRAW BALE SEDIMENT BARRIERS IN DITCHES OR SWALES

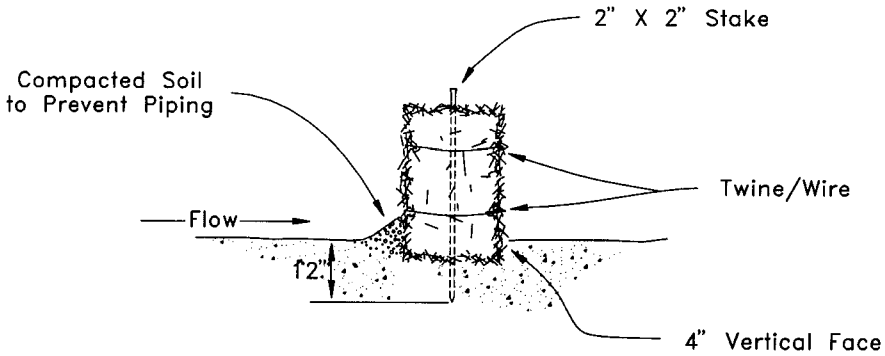

EMBEDDING DETAIL

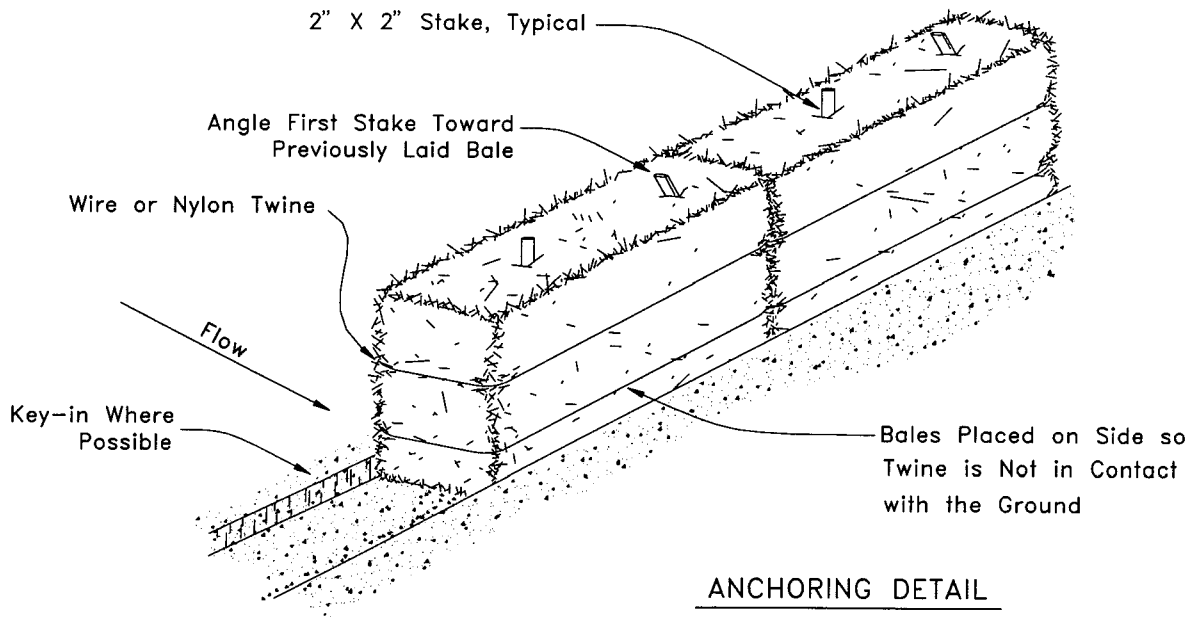

ANCHORING DETAIL

APPENDIX H
Straw Bale Sediment
Barrier Installation

APPENDIX H
Permanent Waterbar
Typical Installation

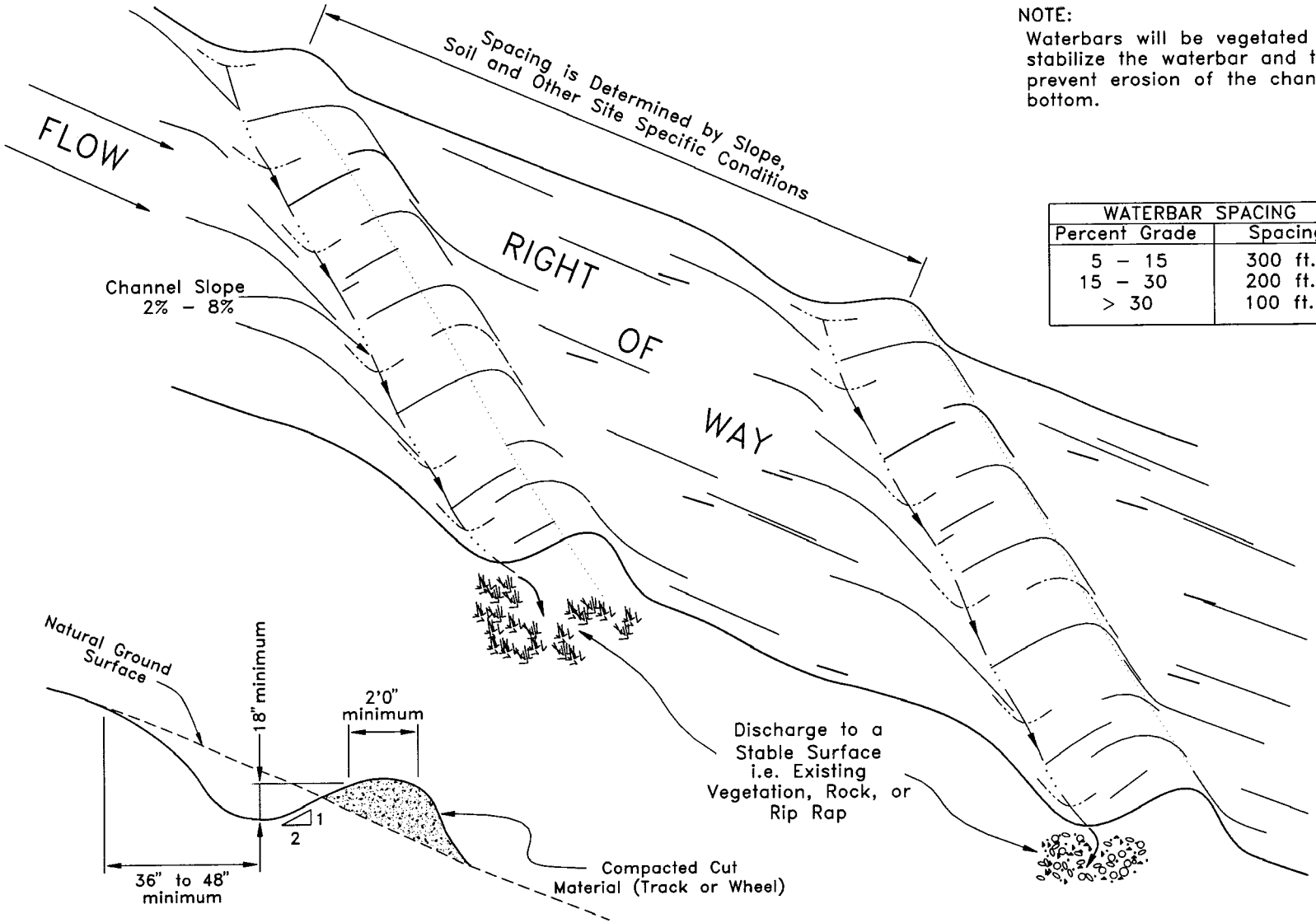

Typical Cross Section

NOTE:
Waterbars will be vegetated to stabilize the waterbar and to prevent erosion of the channel bottom.

WATERBAR SPACING	
Percent Grade	Spacing
5 - 15	300 ft.
15 - 30	200 ft.
> 30	100 ft.

APPENDIX H
Typical Silt Fence
Installation

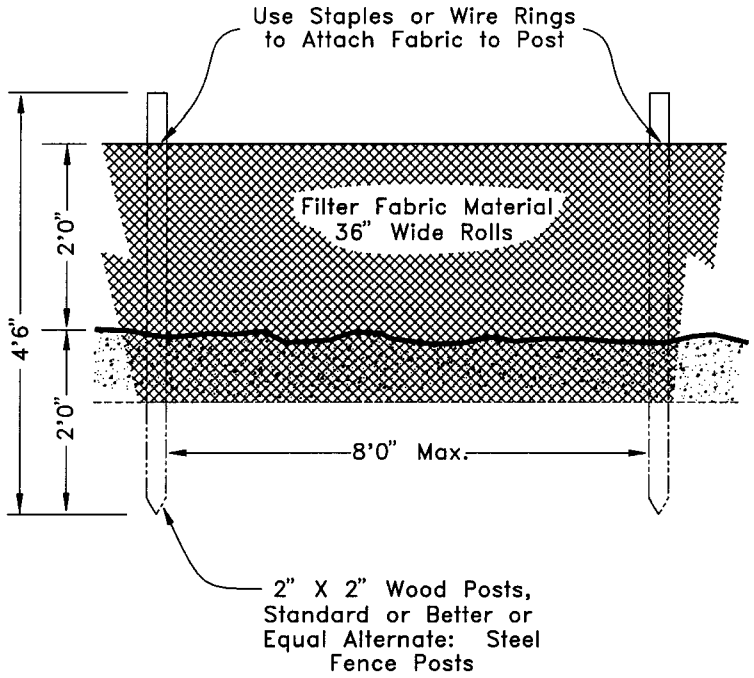

FRONT VIEW

SECTION VIEW

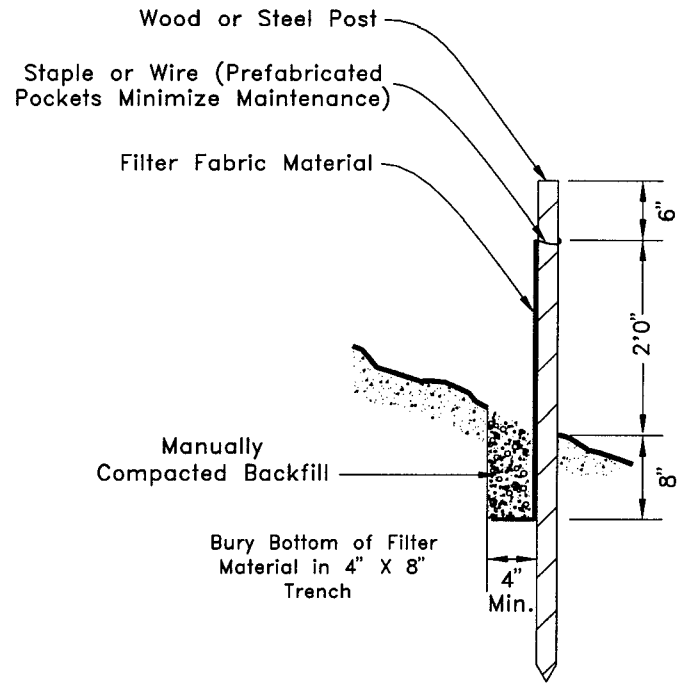

NOTE : Use Amoco Silt Fence
Fabric, style 1380,
or equivalent

APPENDIX H
Sediment Barrier Installation
at Stream Crossings

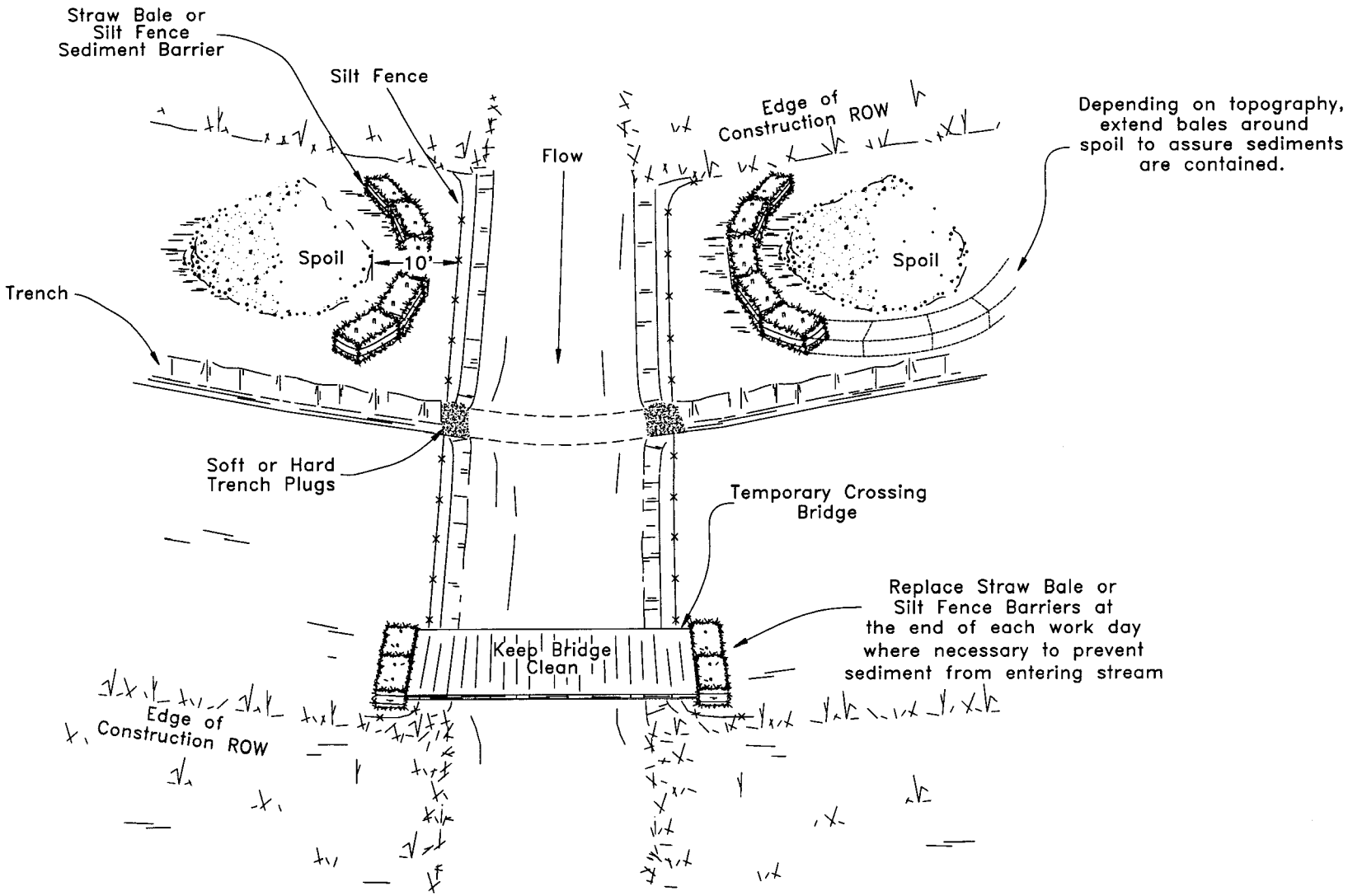
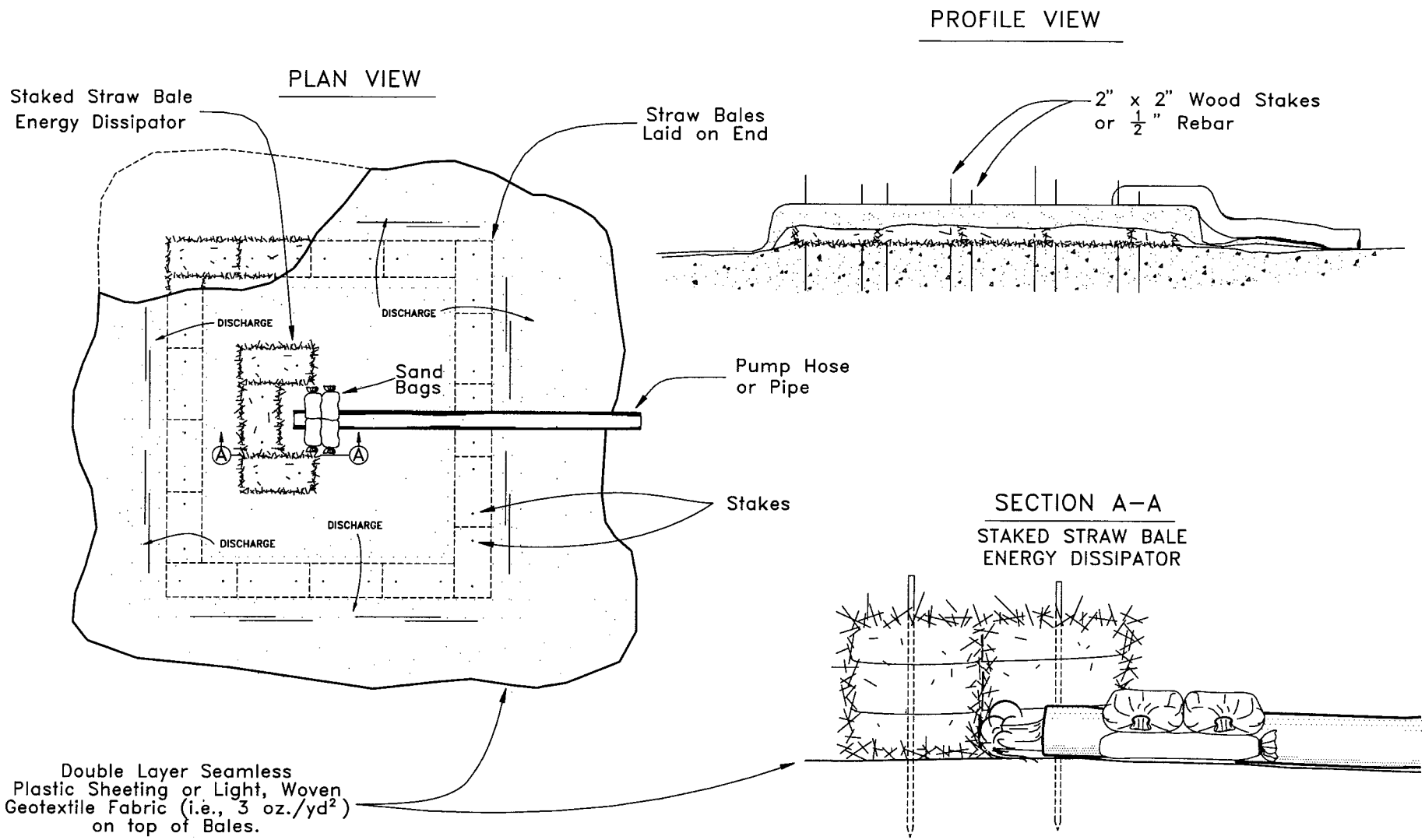
APPENDIX H
Dewater Structure
Installation