TOWNSHIP 52 NORTH, RANGE 76 WEST, OF THE SIXTH PRINCIPAL MERIDIAN, WYOMING.

DEPENDENT RESURVEY, SUBDIVISION OF SECTIONS AND SURVEY

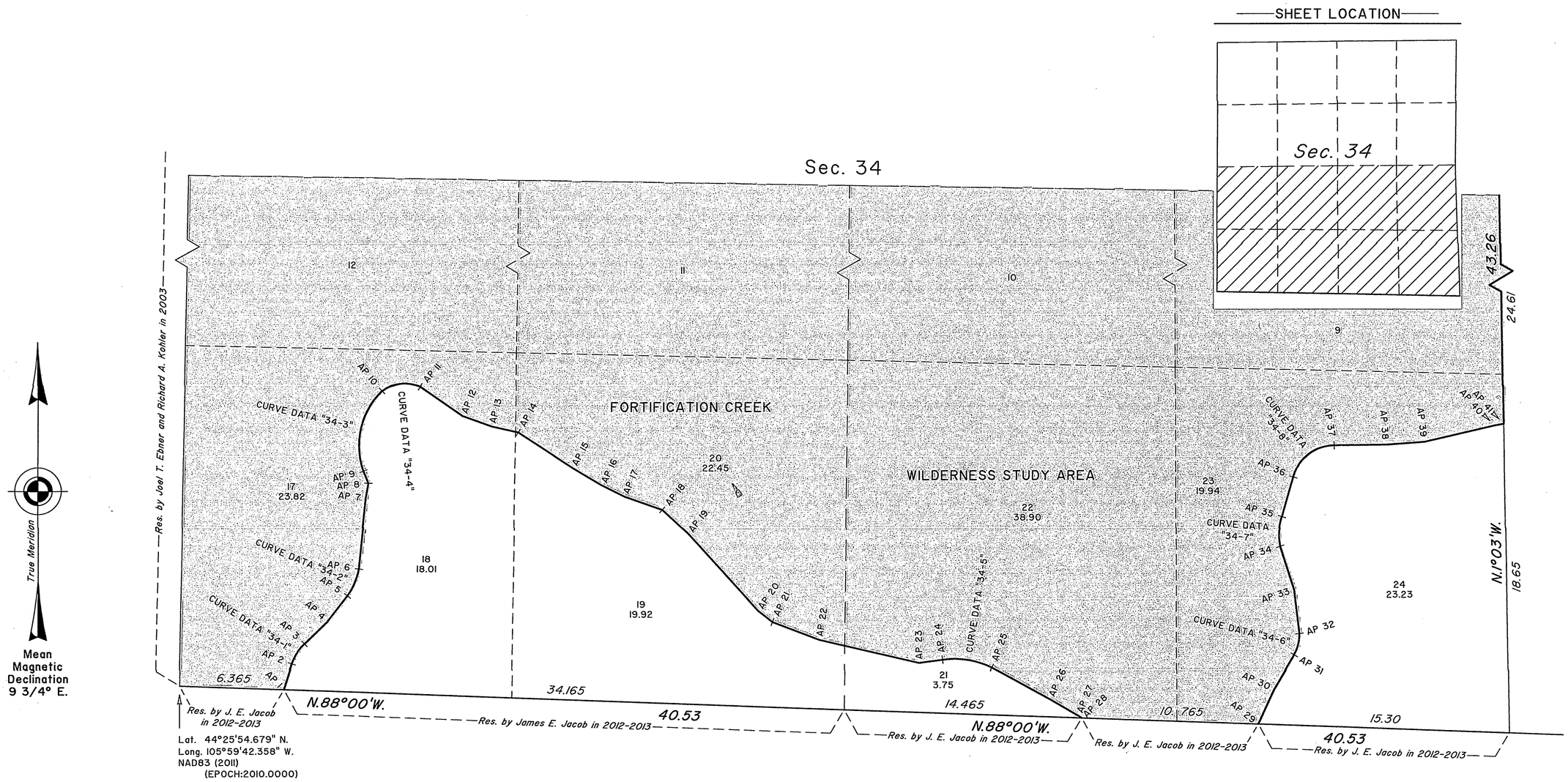

TRAVERSE DETAILS

AP 1		AP 15		AP 29	
	N.17°58'E., 1.63		S.59°38'E., 2.10		N.24°38'E., 2.31
AP 2		AP 16		AP 30	
	CURVE DATA "34-1"		S.63°41'E., 1.50		N.30°48'E., 2.39
AP 3		AP 17		AP 31	
	N.46°10'E., 1.96		S.70°42'E., 2.45		CURVE DATA "34-6"
AP 4		AP 18		AP 32	
	N.38°04'E., 1.95		S.47°36'E., 2.11		N.7°05'W., 2.67
AP 5		AP 19		AP 33	
	CURVE DATA "34-2"		S.42°33'E., 6.32		N.18°13'W., 2.76
AP 6		AP 20		AP 34	
	N.5°56'E., 4.30		S.52°19'E., 1.11		CURVE DATA "34-7"
AP 7		AP 21		AP 35	
	N.10°05'E., 0.92		S.69°11'E., 3.02		N.15°58'E., 2.49
AP 8		AP 22		AP 36	
	N.22°26'W., 0.80		S.77°07'E., 6.26		CURVE DATA "34-8"
AP 9		AP 23		AP 37	
	CURVE DATA "34-3"		N.82°21'E., 1.45		N.89°09'E., 3.15
AP 10		AP 24		AP 38	
	CURVE DATA "34-4"		CURVE DATA "34-5"		N.85°52'E., 2.35
AP 11		AP 25		AP 39	
	S.55°27'E., 3.13		S.61°34'E., 3.98		N.76°55'E., 4.38
AP 12		AP 26		AP 40	
	S.70°37'E., 1.85		S.60°04'E., 1.99		N.79°23'E., 0.57
AP 13		AP 27		AP 41	
	S.77°36'E., 1.69		S.57°08'E., 0.27		
AP 14		AP 28			
	S.57°07'E., 3.94				
AP 15					

CURVE DETAILS

CURVE DATA "34-1"		***CURVE DATA "34-5"***	
Chord Bearing	N.32°31'E.	Chord Bearing	S.80°54'E.
Chord Length	1.42 Chs.	Chord Length	3.04 Chs.
Radius	3.03 Chs.	Radius	5.15 Chs.
Length of Arc	1.43 Chs.	Length of Arc	3.09 Chs.
CURVE DATA "34-2"		***CURVE DATA "34-6"***	
Chord Bearing	N.22°50'E.	Chord Bearing	N.13°54'E.
Chord Length	1.76 Chs.	Chord Length	1.33 Chs.
Radius	3.94 Chs.	Radius	2.58 Chs.
Length of Arc	1.77 Chs.	Length of Arc	1.35 Chs.
CURVE DATA "34-3"		***CURVE DATA "34-7"***	
Chord Bearing	N.13°03'E.	Chord Bearing	N.4°18'E.
Chord Length	4.97 Chs.	Chord Length	1.79 Chs.
Radius	4.54 Chs.	Radius	3.33 Chs.
Length of Arc	5.26 Chs.	Length of Arc	1.81 Chs.
CURVE DATA "34-4"		***CURVE DATA "34-8"***	
Chord Bearing	N.83°49'E.	Chord Bearing	N.52°32'E.
Chord Length	2.35 Chs.	Chord Length	3.13 Chs.
Radius	2.42 Chs.	Radius	2.58 Chs.
Length of Arc	2.45 Chs.	Length of Arc	3.36 Chs.

5 4 3 2 1 0 5 10 15

Scale in Chains

Reference should be made to sheet No. 1 for survey information.

UNITED STATES DEPARTMENT OF THE INTERIOR
BUREAU OF LAND MANAGEMENT

Cheyenne, Wyoming January 24, 2014

This plat is strictly conformable to the approved field notes, and the survey, having been correctly executed in accordance with the requirements of law and the regulations of this Bureau, is hereby accepted.

For the Director

John P. Lee

John P. Lee
Chief Cadastral Surveyor for Wyoming

L.T.W./J.E.J.

OFFICIALLY FILED: January 24, 2014

TOWNSHIP 52 NORTH, RANGE 76 WEST, OF THE SIXTH PRINCIPAL MERIDIAN, WYOMING.

DEPENDENT RESURVEY, SUBDIVISION OF SECTIONS AND SURVEY

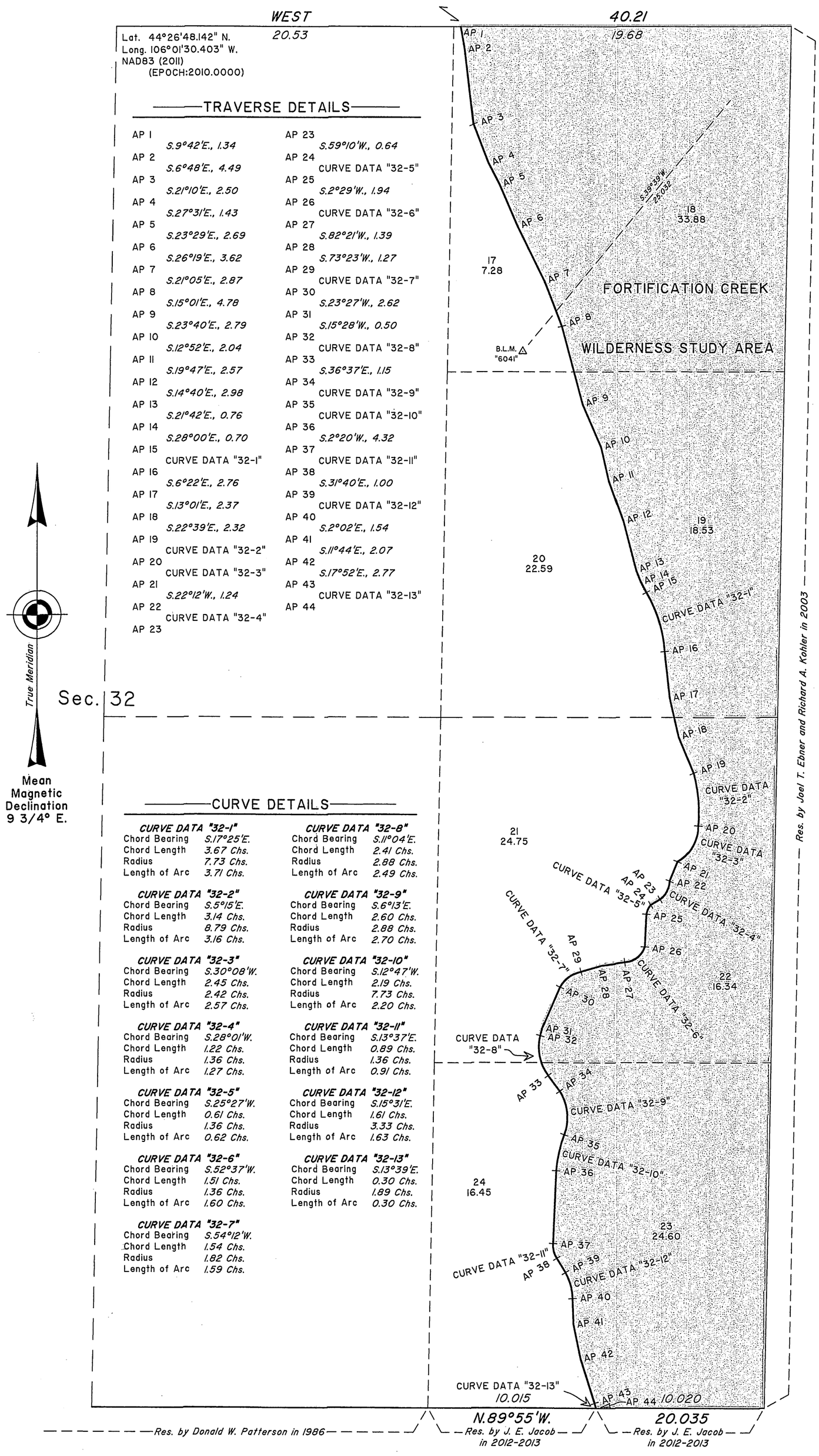

SHEET LOCATION

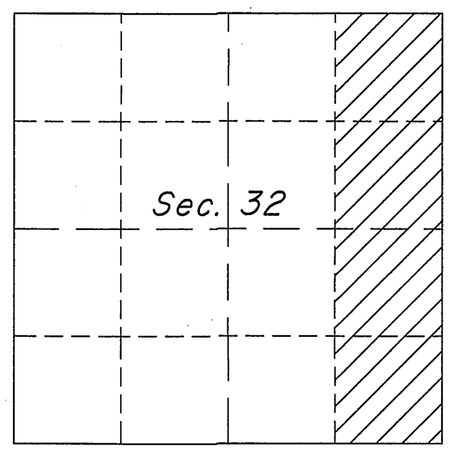

Reference should be made to sheet No. 1 for survey information.

UNITED STATES DEPARTMENT OF THE INTERIOR
BUREAU OF LAND MANAGEMENT

Cheyenne, Wyoming January 24, 2014

This plat is strictly conformable to the approved field notes, and the survey, having been correctly executed in accordance with the requirements of law and the regulations of this Bureau, is hereby accepted.

For the Director

John P. Lee
Chief Cadastral Surveyor for Wyoming

L.T.W./J.E.J.

TOWNSHIP 52 NORTH, RANGE 76 WEST, OF THE SIXTH PRINCIPAL MERIDIAN, WYOMING.

DEPENDENT RESURVEY, SUBDIVISION OF SECTIONS AND SURVEY

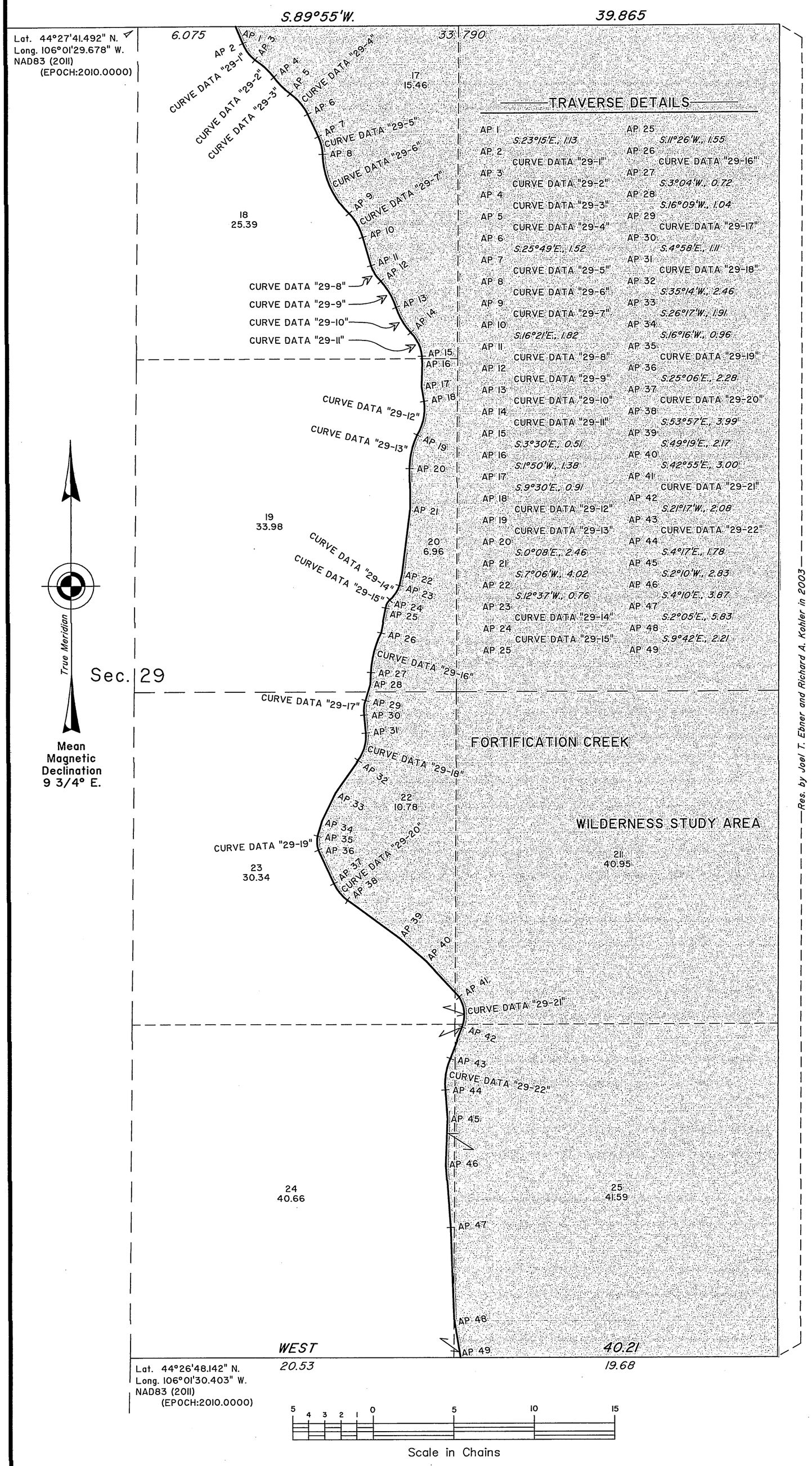

TRAVERSE DETAILS

AP 1	S.23°15'E., 1.13
AP 2	CURVE DATA "29-1"
AP 3	CURVE DATA "29-2"
AP 4	CURVE DATA "29-3"
AP 5	CURVE DATA "29-4"
AP 6	S.25°49'E., 1.52
AP 7	CURVE DATA "29-5"
AP 8	CURVE DATA "29-6"
AP 9	CURVE DATA "29-7"
AP 10	S.16°21'E., 1.82
AP 11	CURVE DATA "29-8"
AP 12	CURVE DATA "29-9"
AP 13	CURVE DATA "29-10"
AP 14	CURVE DATA "29-11"
AP 15	S.3°30'E., 0.51
AP 16	S.1°50'W., 1.38
AP 17	S.9°30'E., 0.91
AP 18	CURVE DATA "29-12"
AP 19	CURVE DATA "29-13"
AP 20	S.0°08'E., 2.46
AP 21	S.7°06'W., 4.02
AP 22	S.12°37'W., 0.76
AP 23	CURVE DATA "29-14"
AP 24	CURVE DATA "29-15"
AP 25	
AP 25	S.11°26'W., 1.55
AP 26	CURVE DATA "29-16"
AP 27	S.3°04'W., 0.72
AP 28	S.16°09'W., 1.04
AP 29	CURVE DATA "29-17"
AP 30	S.4°58'E., 1.11
AP 31	CURVE DATA "29-18"
AP 32	S.35°14'W., 2.46
AP 33	S.26°17'W., 1.91
AP 34	S.16°16'W., 0.96
AP 35	CURVE DATA "29-19"
AP 36	S.25°06'E., 2.28
AP 37	CURVE DATA "29-20"
AP 38	S.53°57'E., 3.99
AP 39	S.49°19'E., 2.17
AP 40	S.42°55'E., 3.00
AP 41	CURVE DATA "29-21"
AP 42	S.21°17'W., 2.08
AP 43	CURVE DATA "29-22"
AP 44	S.4°17'E., 1.78
AP 45	S.2°10'W., 2.83
AP 46	S.4°10'E., 3.87
AP 47	S.2°05'E., 5.83
AP 48	S.9°42'E., 2.21
AP 49	

SHEET LOCATION

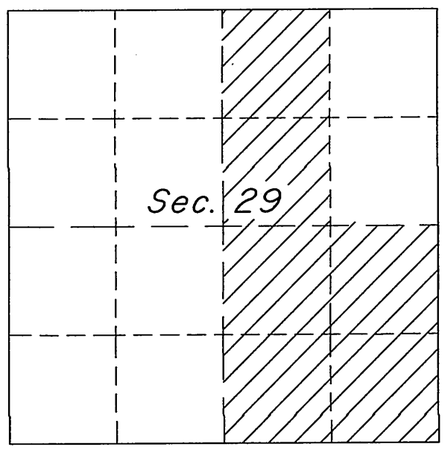

CURVE DETAILS

CURVE DATA "29-1"	
Chord Bearing	S.36°31'E.
Chord Length	1.27 Chs.
Radius	2.42 Chs.
Length of Arc	1.28 Chs.

CURVE DATA "29-2"	
Chord Bearing	S.47°17'E.
Chord Length	1.55 Chs.
Radius	5.00 Chs.
Length of Arc	1.56 Chs.

CURVE DATA "29-3"	
Chord Bearing	S.44°28'E.
Chord Length	1.45 Chs.
Radius	4.70 Chs.
Length of Arc	1.46 Chs.

CURVE DATA "29-4"	
Chord Bearing	S.40°49'E.
Chord Length	1.66 Chs.
Radius	3.18 Chs.
Length of Arc	1.68 Chs.

CURVE DATA "29-5"	
Chord Bearing	S.13°48'E.
Chord Length	1.12 Chs.
Radius	2.42 Chs.
Length of Arc	1.13 Chs.

CURVE DATA "29-6"	
Chord Bearing	S.23°55'E.
Chord Length	3.97 Chs.
Radius	5.30 Chs.
Length of Arc	4.07 Chs.

CURVE DATA "29-7"	
Chord Bearing	S.29°54'E.
Chord Length	1.70 Chs.
Radius	3.33 Chs.
Length of Arc	1.72 Chs.

CURVE DATA "29-8"	
Chord Bearing	S.32°30'E.
Chord Length	1.14 Chs.
Radius	2.42 Chs.
Length of Arc	1.15 Chs.

CURVE DATA "29-9"	
Chord Bearing	S.30°16'E.
Chord Length	1.87 Chs.
Radius	4.54 Chs.
Length of Arc	1.88 Chs.

CURVE DATA "29-10"	
Chord Bearing	S.30°32'E.
Chord Length	1.79 Chs.
Radius	4.24 Chs.
Length of Arc	1.80 Chs.

CURVE DATA "29-11"	
Chord Bearing	S.24°06'E.
Chord Length	1.60 Chs.
Radius	2.27 Chs.
Length of Arc	1.64 Chs.

CURVE DATA "29-12"	
Chord Bearing	S.11°27'W.
Chord Length	2.10 Chs.
Radius	3.03 Chs.
Length of Arc	2.14 Chs.

CURVE DATA "29-13"	
Chord Bearing	S.13°04'W.
Chord Length	2.13 Chs.
Radius	4.85 Chs.
Length of Arc	2.15 Chs.

CURVE DATA "29-14"	
Chord Bearing	S.34°40'W.
Chord Length	1.08 Chs.
Radius	1.97 Chs.
Length of Arc	1.09 Chs.

CURVE DATA "29-15"	
Chord Bearing	S.26°51'W.
Chord Length	0.56 Chs.
Radius	0.83 Chs.
Length of Arc	0.57 Chs.

CURVE DATA "29-16"	
Chord Bearing	S.14°35'W.
Chord Length	2.52 Chs.
Radius	6.06 Chs.
Length of Arc	2.54 Chs.

CURVE DATA "29-17"	
Chord Bearing	S.5°53'W.
Chord Length	0.90 Chs.
Radius	1.82 Chs.
Length of Arc	0.91 Chs.

CURVE DATA "29-18"	
Chord Bearing	S.15°59'W.
Chord Length	1.76 Chs.
Radius	2.42 Chs.
Length of Arc	1.80 Chs.

CURVE DATA "29-19"	
Chord Bearing	S.2°56'E.
Chord Length	0.86 Chs.
Radius	1.67 Chs.
Length of Arc	0.87 Chs.

CURVE DATA "29-20"	
Chord Bearing	S.39°02'E.
Chord Length	1.33 Chs.
Radius	3.03 Chs.
Length of Arc	1.34 Chs.

CURVE DATA "29-21"	
Chord Bearing	S.5°31'E.
Chord Length	1.86 Chs.
Radius	2.12 Chs.
Length of Arc	1.92 Chs.

CURVE DATA "29-22"	
Chord Bearing	S.9°22'W.
Chord Length	1.95 Chs.
Radius	3.79 Chs.
Length of Arc	1.97 Chs.

Reference should be made to sheet No. 1 for survey information.

UNITED STATES DEPARTMENT OF THE INTERIOR
BUREAU OF LAND MANAGEMENT

Cheyenne, Wyoming — January 24, 2014

This plat is strictly conformable to the approved field notes, and the survey, having been correctly executed in accordance with the requirements of law and the regulations of this Bureau, is hereby accepted.

For the Director

John P. Lee
Chief Cadastral Surveyor for Wyoming

Res. by Joel T. Ebner and Richard A. Kohler in 2003

L.T.W./J.E.J.

OFFICIALLY FILED: January 24, 2014

TOWNSHIP 52 NORTH, RANGE 76 WEST, OF THE SIXTH PRINCIPAL MERIDIAN, WYOMING.

DEPENDENT RESURVEY, SUBDIVISION OF SECTIONS AND SURVEY

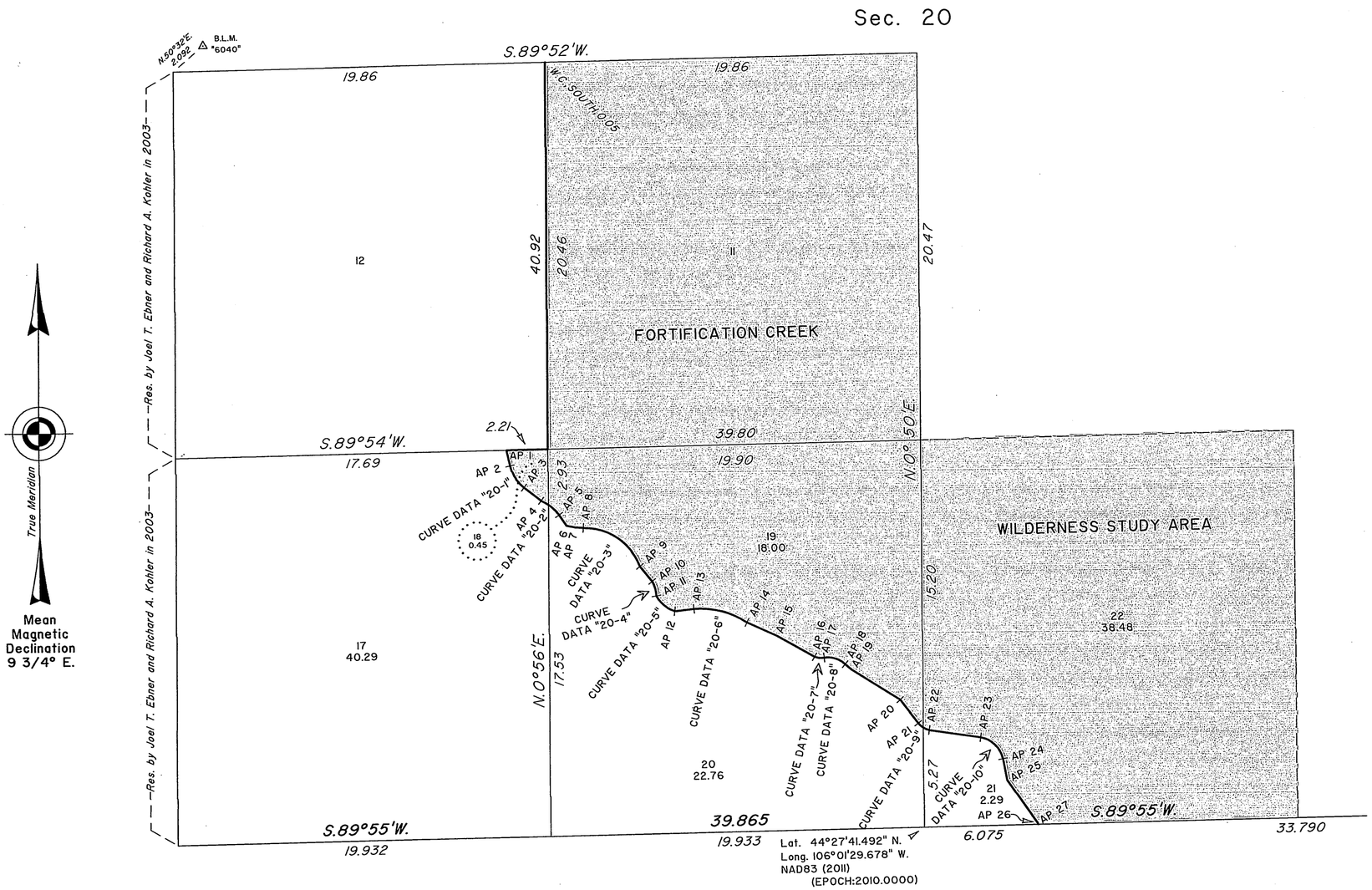

Lat. 44°27'41.492" N.
Long. 106°01'29.678" W.
NAD83 (2011)
(EPOCH:2010.0000)

SHEET LOCATION

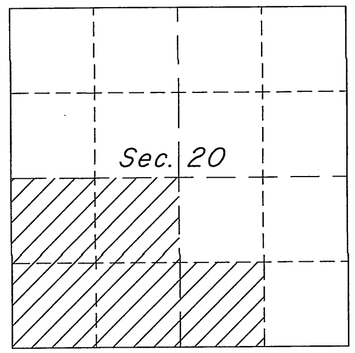

CURVE DETAILS

CURVE DATA "20-1"		**CURVE DATA "20-6"**	
Chord Bearing	S.30°45'E.	Chord Bearing	S.74°27'E.
Chord Length	1.35 Chs.	Chord Length	2.93 Chs.
Radius	1.97 Chs.	Radius	4.54 Chs.
Length of Arc	1.38 Chs.	Length of Arc	2.98 Chs.
CURVE DATA "20-2"		**CURVE DATA "20-7"**	
Chord Bearing	S.50°38'E.	Chord Bearing	S.84°14'E.
Chord Length	1.22 Chs.	Chord Length	0.51 Chs.
Radius	2.42 Chs.	Radius	0.91 Chs.
Length of Arc	1.23 Chs.	Length of Arc	0.52 Chs.
CURVE DATA "20-3"		**CURVE DATA "20-8"**	
Chord Bearing	S.54°55'E.	Chord Bearing	S.71°16'E.
Chord Length	3.64 Chs.	Chord Length	1.18 Chs.
Radius	3.18 Chs.	Radius	1.36 Chs.
Length of Arc	3.88 Chs.	Length of Arc	1.22 Chs.
CURVE DATA "20-4"		**CURVE DATA "20-9"**	
Chord Bearing	S.14°41'E.	Chord Bearing	S.56°28'E.
Chord Length	0.80 Chs.	Chord Length	0.69 Chs.
Radius	1.52 Chs.	Radius	1.14 Chs.
Length of Arc	0.81 Chs.	Length of Arc	0.70 Chs.
CURVE DATA "20-5"		**CURVE DATA "20-10"**	
Chord Bearing	S.49°28'E.	Chord Bearing	S.44°51'E.
Chord Length	1.28 Chs.	Chord Length	1.65 Chs.
Radius	1.74 Chs.	Radius	1.52 Chs.
Length of Arc	1.31 Chs.	Length of Arc	1.74 Chs.

TRAVERSE DETAILS

AP 1		AP 10		AP 19	
	S.11°48'E., 0.85		CURVE DATA "20-4"		S.57°05'E., 3.04
AP 2		AP 11		AP 20	
	CURVE DATA "20-1"		CURVE DATA "20-5"		S.36°50'E., 1.58
AP 3		AP 12		AP 21	
	S.51°44'E., 1.15		N.84°26'E., 1.02		CURVE DATA "20-9"
AP 4		AP 13		AP 22	
	CURVE DATA "20-2		CURVE DATA "20-6"		S.80°53'E., 2.77
AP 5		AP 14		AP 23	
	S.33°36'E., 0.71		S.64°33'E., 1.75		CURVE DATA "20-10"
AP 6		AP 15		AP 24	
	S.78°46'E., 0.46		S.59°41'E., 2.26		S.10°02'E., 1.15
AP 7		AP 16		AP 25	
	S.84°34'E., 0.44		CURVE DATA "20-7"		S.33°57'E., 2.75
AP 8		AP 17		AP 26	
	CURVE DATA "20-3"		CURVE DATA "20-8"		S.23°15'E., 0.11
AP 9		AP 18		AP 27	
	S.38°19'E., 1.03		S.50°03'E., 0.45		
AP 10		AP 19			

5 4 3 2 1 0 5 10 15

Scale in Chains

Reference should be made to sheet No. 1 for survey information.

UNITED STATES DEPARTMENT OF THE INTERIOR
BUREAU OF LAND MANAGEMENT

Cheyenne, Wyoming January 24, 2014

This plat is strictly conformable to the approved field notes, and the survey, having been correctly executed in accordance with the requirements of law and the regulations of this Bureau, is hereby accepted.

For the Director

John P. Lee
Chief Cadastral Surveyor for Wyoming

L.T.W./J.E.J.

OFFICIALLY FILED: January 24, 2014

TOWNSHIP 52 NORTH, RANGE 76 WEST, OF THE SIXTH PRINCIPAL MERIDIAN, WYOMING.

DEPENDENT RESURVEY, SUBDIVISION OF SECTIONS AND SURVEY

DETAIL "2-A"

Section 5

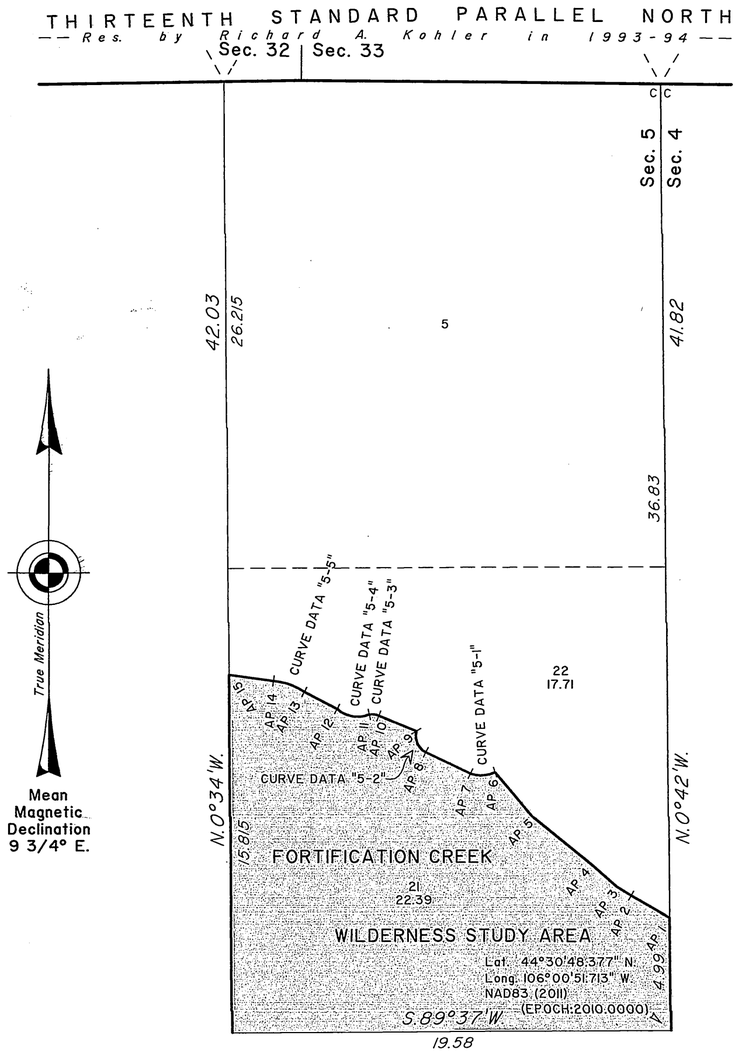

TRAVERSE DETAILS

AP 1	
	N.60°49'W., 1.97
AP 2	
	N.58°23'W., 0.77
AP 3	
	N.48°57'W., 1.47
AP 4	
	N.51°26'W., 3.33
AP 5	
	N.40°27'W., 2.62
AP 6	
	CURVE DATA "5-1"
AP 7	
	N.64°39'W., 2.21
AP 8	
	CURVE DATA "5-2"
AP 9	
	N.68°18'W., 1.81
AP 10	
	CURVE DATA "5-3"
AP 11	
	CURVE DATA "5-4"
AP 12	
	N.62°45'W., 1.65
AP 13	
	CURVE DATA "5-5"
AP 14	
	N.82°36'W., 2.00
AP 15	

DETAIL "2-B"

Section 22

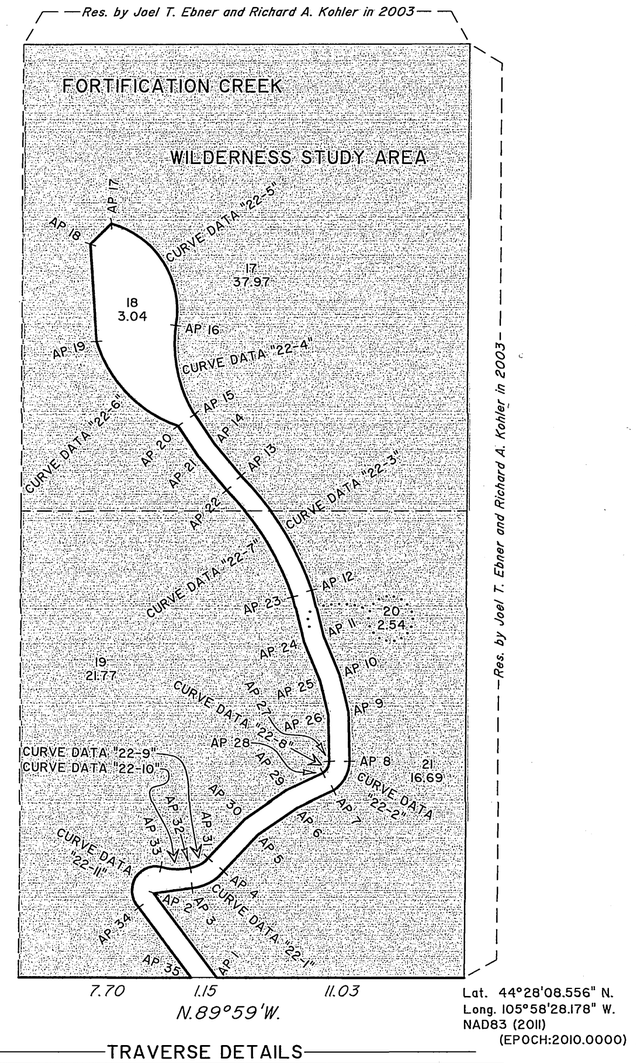

TRAVERSE DETAILS

AP 1	
	N.37°04'W., 4.67
AP 2	
	N.82°19'E., 1.72
AP 3	
	CURVE DATA "22-1"
AP 4	
	N.43°23'E., 2.25
AP 5	
	N.55°39'E., 2.07
AP 6	
	N.64°46'E., 1.83
AP 7	
	CURVE DATA "22-2"
AP 8	
	N.1°20'W., 2.17
AP 9	
	N.13°55'W., 1.73
AP 10	
	N.22°45'W., 1.87
AP 11	
	N.13°56'W., 2.04
AP 12	
	CURVE DATA "22-3"
AP 13	
	N.40°14'W., 1.82
AP 14	
	N.34°07'W., 1.61
AP 15	
	CURVE DATA "22-4"
AP 16	
	CURVE DATA "22-5"
AP 17	
	S.46°11'W., 1.30
AP 18	
	S.3°57'E., 4.30
AP 19	
	CURVE DATA "22-6"
AP 20	
	S.34°05'E., 1.64
AP 21	
	S.40°19'E., 1.94
AP 22	
	CURVE DATA "22-7"
AP 23	
	S.13°48'E., 2.02
AP 24	
	S.22°45'E., 1.87
AP 25	
	S.13°55'E., 1.56
AP 26	
	S.1°19'E., 2.06
AP 27	
	CURVE DATA "22-8"
AP 28	
	S.65°01'W., 1.80
AP 29	
	S.55°39'W., 2.24
AP 30	
	S.43°21'W., 2.40
AP 31	
	CURVE DATA "22-9"
AP 32	
	CURVE DATA "22-10"
AP 33	
	CURVE DATA "22-11"
AP 34	
	S.36°57'E., 3.89
AP 35	

DETAIL LOCATIONS

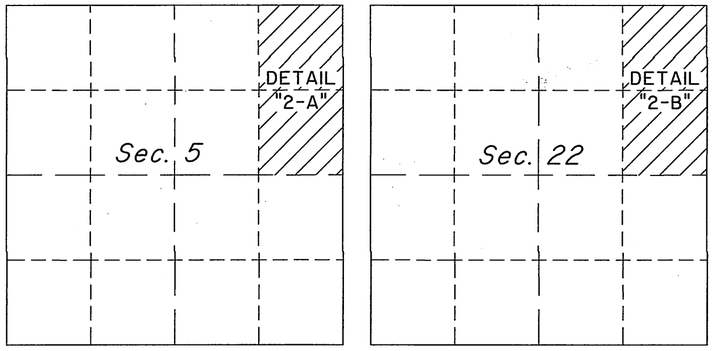

CURVE DETAILS

CURVE DATA "5-1"	
Chord Bearing	S.86°48'W.
Chord Length	1.10 Chs.
Radius	1.52 Chs.
Length of Arc	1.12 Chs.
CURVE DATA "5-2"	
Chord Bearing	N.24°34'W.
Chord Length	1.03 Chs.
Radius	0.83 Chs.
Length of Arc	1.11 Chs.
CURVE DATA "5-3"	
Chord Bearing	N.81°44'W.
Chord Length	0.43 Chs.
Radius	0.68 Chs.
Length of Arc	0.44 Chs.
CURVE DATA "5-4"	
Chord Bearing	N.80°28'W.
Chord Length	1.45 Chs.
Radius	1.36 Chs.
Length of Arc	1.53 Chs.
CURVE DATA "5-5"	
Chord Bearing	N.70°39'W.
Chord Length	1.46 Chs.
Radius	3.03 Chs.
Length of Arc	1.47 Chs.
CURVE DATA "22-1"	
Chord Bearing	N.62°09'E.
Chord Length	1.58 Chs.
Radius	2.12 Chs.
Length of Arc	1.62 Chs.
CURVE DATA "22-2"	
Chord Bearing	N.28°49'E.
Chord Length	1.47 Chs.
Radius	1.52 Chs.
Length of Arc	1.53 Chs.
CURVE DATA "22-3"	
Chord Bearing	N.32°05'W.
Chord Length	5.96 Chs.
Radius	13.33 Chs.
Length of Arc	6.01 Chs.
CURVE DATA "22-4"	
Chord Bearing	N.11°44'W.
Chord Length	4.02 Chs.
Radius	6.06 Chs.
Length of Arc	4.10 Chs.
CURVE DATA "22-5"	
Chord Bearing	N.32°57'W.
Chord Length	5.33 Chs.
Radius	3.94 Chs.
Length of Arc	5.85 Chs.
CURVE DATA "22-6"	
Chord Bearing	S.44°02'E.
Chord Length	5.20 Chs.
Radius	5.76 Chs.
Length of Arc	5.40 Chs.
CURVE DATA "22-7"	
Chord Bearing	S.32°05'E.
Chord Length	5.56 Chs.
Radius	12.42 Chs.
Length of Arc	5.61 Chs.
CURVE DATA "22-8"	
Chord Bearing	S.28°45'W.
Chord Length	0.59 Chs.
Radius	0.61 Chs.
Length of Arc	0.62 Chs.
CURVE DATA "22-9"	
Chord Bearing	S.62°06'W.
Chord Length	0.90 Chs.
Radius	1.21 Chs.
Length of Arc	0.92 Chs.
CURVE DATA "22-10"	
Chord Bearing	N.88°27'W.
Chord Length	1.30 Chs.
Radius	2.42 Chs.
Length of Arc	1.32 Chs.
CURVE DATA "22-11"	
Chord Bearing	S.28°33'W.
Chord Length	2.04 Chs.
Radius	1.06 Chs.
Length of Arc	2.75 Chs.

Reference should be made to sheet No. 1 for survey information.

UNITED STATES DEPARTMENT OF THE INTERIOR
BUREAU OF LAND MANAGEMENT

Cheyenne, Wyoming — January 24, 2014

This plat is strictly conformable to the approved field notes, and the survey, having been correctly executed in accordance with the requirements of law and the regulations of this Bureau, is hereby accepted.

For the Director

John P. Lee
Chief Cadastral Surveyor for Wyoming

5 4 3 2 1 0 5 10 15
Scale in Chains

L.T.W./J.E.J.

8619

Click Here for Field Notes

ORIGINAL

TOWNSHIP 52 NORTH, RANGE 76 WEST, OF THE SIXTH PRINCIPAL MERIDIAN, WYOMING.

DEPENDENT RESURVEY, SUBDIVISION OF SECTIONS AND SURVEY

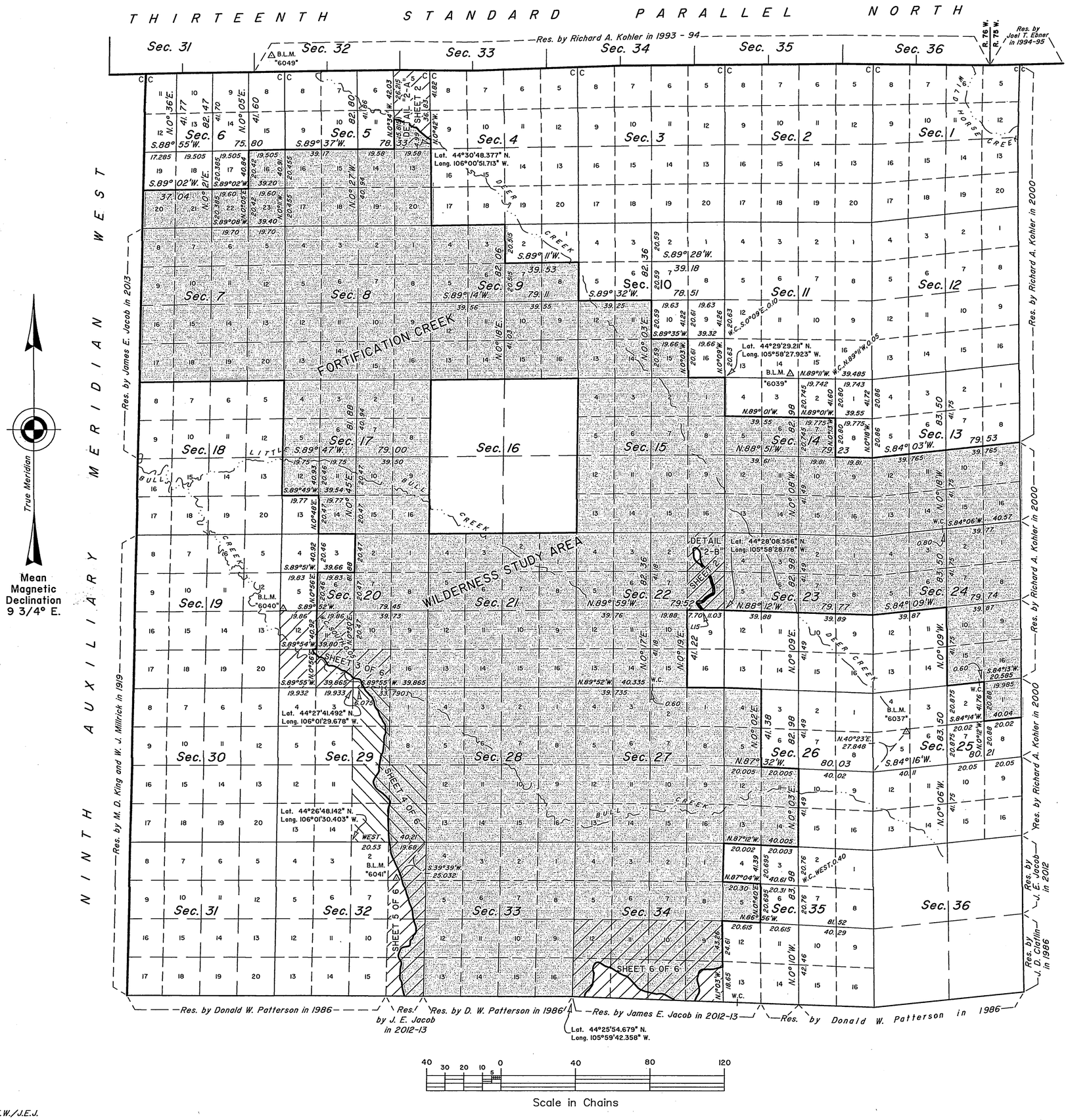

A history of surveys is contained in the field notes.

This plat represents the dependent resurvey of portions of the subdivisional lines, designed to restore the corners in their true original locations according to the best available evidence, the survey of the subdivision of certain sections and the survey of portions of the Fortification Creek Wilderness Study Area boundary, T. 52 N., R. 76 W., Sixth Principal Meridian, Wyoming.

Except as indicated hereon, the lotting and areas are as shown on the plat approved March 15, 2005.

Survey executed by James E. Jacob, Cadastral Surveyor, beginning August 8, 2012, and completed September 5, 2013, pursuant to Special Instructions and Assignment Instructions dated July 18, 2012, for Group No. 866, Wyoming.

Coordinates shown are referenced to the NAD 83(2011)(EPOCH:2010.0000) datum.

Note: Solid lines not showing bearing and distance were dependently resurveyed by Joel T. Ebner and Richard A. Kohler in 2003, unless otherwise noted.

GEODETIC CONTROL TIES

THE FOLLOWING TIES ARE SHOWN HERE DUE TO SPACE LIMITATIONS.

B.L.M. G.P.S. CONTROL POINT "6039"	N.61°24'W., 5.115 chs. from 1 S 11 / 4 S 14
B.L.M. G.P.S. CONTROL POINT "6040"	N.50°32'E., 2.092 chs. from 1 S 19 / 4 S 20
B.L.M. G.P.S. CONTROL POINT "6049"	N.54°22'E., 15.040 chs. from E 1/16 S 6 (N. bdy.)

UNITED STATES DEPARTMENT OF THE INTERIOR
BUREAU OF LAND MANAGEMENT

Cheyenne, Wyoming January 24, 2014

This plat is strictly conformable to the approved field notes, and the survey, having been correctly executed in accordance with the requirements of law and the regulations of this Bureau, is hereby accepted.

For the Director

John P. Lee

John P. Lee
Chief Cadastral Surveyor for Wyoming

L.T.W./J.E.J.

1630 B

OFFICIALLY FILED: January 24, 2014

Click Here for Field Notes

TOWNSHIP 52 NORTH, RANGE 76 WEST, OF THE SIXTH PRINCIPAL MERIDIAN, WYOMING.

DEPENDENT RESURVEY

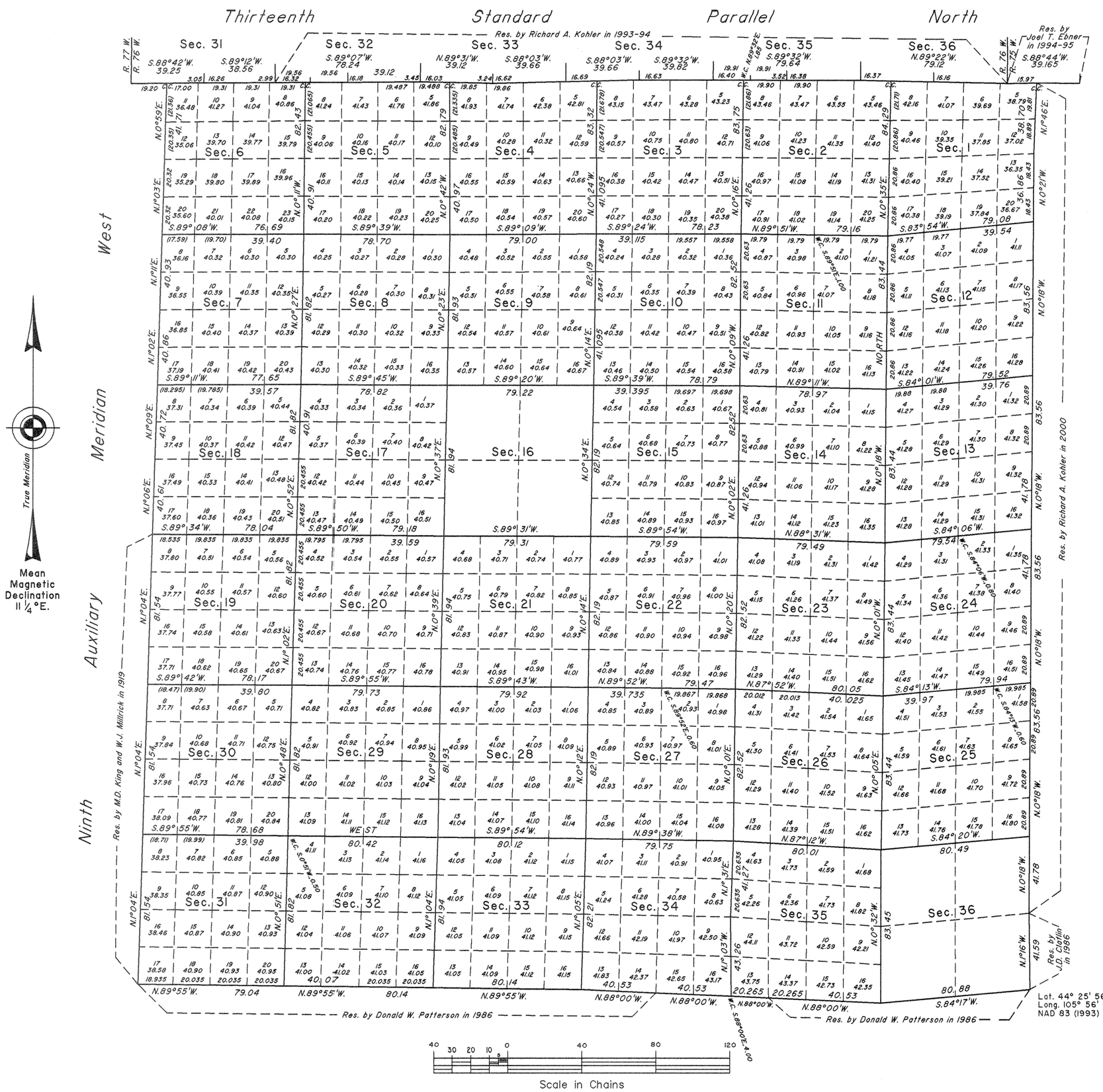

A history of surveys is contained in the field notes.

This plat represents the Dependent Resurvey of a portion of the Thirteenth Standard Parallel North, through R. 76 W., a portion of the Ninth Auxiliary Meridian West, through T. 52 N., between Rs. 76 and 77 W., a portion of the south boundary, and the subdivisional lines, designed to restore the corners in their true original locations according to the best available evidence, T. 52 N., R. 76 W., Sixth Principal Meridian, Wyoming.

Certain modified lots and areas shown hereon pertain to Federal interest estate only. Except as indicated hereon, the lotting and areas are as shown on the plat approved August 15, 1883.

Survey executed by Joel T. Ebner and Richard A. Kohler, Cadastral Surveyors, beginning June 11, 2003, and completed September 3, 2003, pursuant to Special Instructions dated March 12, 2003, for Group No. 711, Wyoming.

UNITED STATES DEPARTMENT OF THE INTERIOR
BUREAU OF LAND MANAGEMENT

Cheyenne, Wyoming March 15, 2005

This plat is strictly conformable to the approved field notes, and the survey, having been correctly executed in accordance with the requirements of law and the regulations of this Bureau, is hereby accepted.

For the Director

John P. Lee

John P. Lee
Chief Cadastral Surveyor for Wyoming

J.T.E. / L.L.M.

OFFICALLY FILED: March 15, 2005

Click Here for Field Notes

TOWNSHIP No. 52 NORTH. RANGE No. 76 WEST of the 6TH Principal MERIDIAN.

Total number of Acres. 23007.65

Surveys Designated	By Whom Surveyed	Date of Contract	Amount of Surveys Mls	Chs	Lks	When Surveyed	Magnetic Declination
E. & S. Township lines	E. T. Stahle	July 12, 1882	11	79	87	March 20, 21, 1883	16° 55' East
Subdivisions	" " "	" " "	59	76	98	Apr. 3-7, 1883	16° 50 "
Connections	" " "	" " "	1	02	93	" " "	
9° Auxil. M. W.	" " "	" " "	6	00	99	March 17, 1883	
13° Stand. P. N.	" " "	" " "	5	77	21	March 12 & 13, 1883	

The above Map of Township No. 52 North Range No. 76 West of the Sixth Principal Meridian Wyoming Territory is strictly conformable to the field notes of the survey thereof on file in this Office, which have been examined and approved

Surveyor General's Office,
Cheyenne Wyoming
August 15th 1883

Edw. C. David
Sur. Genl.

A. Gast & Co., St. Louis Mo.

(21)
Indexed

2245

Click Here for Field Notes

EXTERIOR LINES.

Scale 3 miles to 1 inch. *Magnetic Variation E.*

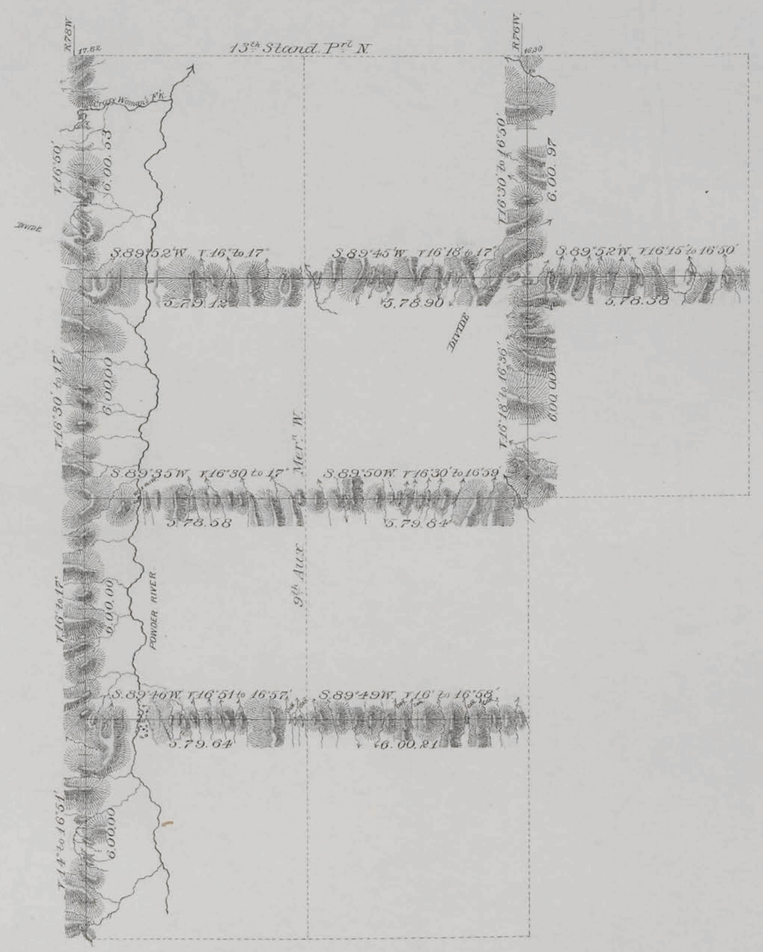

Surveys Designated	By Whom Surveyed.	Date of Contract.	Amount of Surveys			When Surveyed.
			Mls.	Chs.	Lks.	
Exterior lines	E. F. Stahle	July 12th 1882	77	76	17	March 19-28, 1883
Connections	" " "	" " "		34	12	" " "

I hereby certify that the above diagram of the Exterior lines of Tps. 51 & 52 N. Rs. 75, 76 & 77 W. & Tps. 49 & 50 N. Rs. 76 & 77 W. of the 6th Principal Meridian, Wyoming Territory, is strictly conformable to the field notes of the survey thereof on file in this Office, which have been examined and approved.

Surveyor General's Office,
Cheyenne, Wyoming, August 15th 1883

Edw. C. David
Surr. Genl.

Click Here for Field Notes

(21) Indexed

2225

85

9TH AUXILIARY MERIDIAN WEST.

along W. boundaries of Tps 49, 50, 51, & 52 N., R. 76 W. of 6th P.M. Wyoming Territory.
Scale 40 Chs. to 1 inch Magnetic Var. East.

Surveys Designated	By Whom Surveyed	Date of Contract	Amount of Surveys			When Surveyed
			Mls	Chs	Lks	
9th Aux.ly Mer.n W.	E. F. Stahle	July 12th 1882	24	0	99	March 15-17 1883
Connections	" " "	" " "		19	09	" " "

I hereby certify that the above diagram of the 9th Auxiliary Meridian W., along West boundaries of T'ps 49, 50, 51, & 52 N., Range 76 West of the 6th P.M. Wyo. Ter.y is strictly conformable to the field notes of the survey thereof on file in this Office, which have been examined & approved.

Surveyor General's Office,
Cheyenne Wyoming Aug. 15th 1883 } Edw. C. David Sur.r Gen.l

1622