From: jmclain@blm.gov on behalf of Gateway_West_Trans_Line, BLM_WY
To: blm@gwcomment.com
Subject: Fwd: Comments
Date: Monday, July 01, 2013 10:27:42 AM

---------- Forwarded message ----------
From: **Agricol West** <agricolwest@gmail.com>
Date: Thu, Jun 27, 2013 at 12:46 PM
Subject: Fwd: Comments
To: Gateway_West_WYMail@blm.gov

6/27/2013
Owen Ralphs
Agricol West, Inc.
PO Box 248
Rockland, Idaho 83271
208-251-2034

The Gateway West transmission line will have a large negative impact on huge amounts of private land owners, who rely on their property to make a living as most of it is farm land. The BLM has essentially ignored the tax payers in the route that it has chosen, using the excuse of Sage Grouse as the reason that 80% of the line is on private property instead of public. One of the BLM directors even had the nerve to tell me that it wasn't in the best interest of BLM to put the line on public property. I was unaware that what was in the best interest of the BLM was in direct conflict with what was in the best interest of the public. Afterall, they work for the public, do they not? Well, the public have stated that they DO NOT want this line coming through the Rockland valley. It is not a fact that the Sage Grouse will die out if these lines are put on public land. They will simply move to another spot. If the BLM is so worried about wildlife, what of the Sharptail Grouse? The Fish and Game has spent countless time in the Rockland valley over the last couple of years trying to reestablish the Sharptail Grouse population. You mean to tell me that this project wont impact them? Besides that, what of the negative impact that it will have on individual farmers in the valley. The proposed route that BLM has put forward is going right through the middle of our property, property that we just spent thousands of dollars to break out of CRP over the last two years, all to become a money maker for Idaho Power, while we lose that source of income generation. What of the negative impacts that stray voltage will have on people? Is there a study about that? I doubt it, because the BLM is more worried about Sage Grouse than it is about humans. What if I need to hire an airplane sprayer? I hope I can find a suicide bomber to come in and do it for me. No sane pilot is going to try and fly around these massive towers. What happens when the towers interfere with my GPS systems on my tractors? What of the impact that it will have on irrigation systems? BLM hasn't taken into consideration any of this. They're only worried about a few birds, not the impact that it will have on the agricultural industry in Rockland or Idaho in general. Shameful. Idaho Power is a money hungry monopoly who cares nothing for the interests of it's customers or the citizens of Idaho. Rockland has been in need of power line upgrades for several years, and Idaho Power is unwilling to do anything about it. Instead, they just let our power go off several times a month, causing electrical damage to sensitive electrical components. This line is not

good for Idaho and it's not something that should be put on private land. If Idaho Power thinks that they need it, then BLM can figure out a route on BLM land that they can put their towers. Quit hiding behind the lie of Sage Grouse.

Final EIS Comment

Gateway West Transmission Line Project
Final EIS comment period: April 26, 2013 – June 28, 2013

ENTERED 100929

First Name: Anderson Enterprises Last Name: General Manager

Organization or Office Name:

Mailing Address: 17220 S. Cloverdale City: Kuna State: Id Zip: 83634

Daytime Phone: 208-994-1306 Email: —

____Please check her if you wish for your personal information to remain confidential*

*If you wish for your contact information to remain confidential, BLM will protect the personal information that you submit to the extent allowed by law. However, the information may be subject to the Freedom of Information ASct (U.S.C. etc.). See privacy note on reverse.

Please submit your comments by June 28, 2013. Information submitted on this form is being voluntarily provided solely for the purpose of commenting on the Gateway West Transmission Line Project.

Comment:

We strongly SUPPORT segment 8 and segment 9D and OPPOSE the "BLM Preferred Routes"(segment 8B and 9E and proponent's proposed segment 9) as expressed in the Final Environmental Impact Statement.

Three additional reasons among many include:

1. **Segment 8B and 9E (BLM preferred routes) would burden private citizens with costs of millions of dollars.**
2. **Should the BLM's Preferred Routes come to fruition, the citizens and governmental authorities of Idaho's reached collaborative consensus would be turned back as meaningless by Washington DC.**
3. **The "enhancement requirements" to Birds of Prey can be met within the construction processes of the project through the Morley Nelson Birds of Prey defined area.**

This is an example of Washington Bureaucrats going against local and State elected officials, and the citizens who own the private lands.

What can we do?

To mail this comment from please send to:
Bureau of Land Management| Gateway West Project| P.O. Box 20879 | Cheyenne, WY 82003
Comments may also be submitted via email to: Gateway_West_WYMail@blm.gov or online at www.wy.blm.gov/nepa/cfodocs/gateway_west

2013 JUN 20 AM 10:00
RECEIVED
DOI-BLM
CHEYENNE WYOMING

From: jmclain@blm.gov on behalf of Gateway_West_Trans_Line, BLM_WY
To: blm@gwcomment.com
Subject: Fwd: Final EIS Comment Form
Date: Thursday, May 30, 2013 10:29:06 AM

---------- Forwarded message ----------
From: **CTR Farms** <ctrfarms@hotmail.com>
Date: Mon, May 27, 2013 at 11:27 PM
Subject: Final EIS Comment Form
To: "Gateway_West_WYMail@blm.gov" <Gateway_West_WYMail@blm.gov>

BLM,
I am writing to comment on the Gateway project segment 7C.

It is my understanding that the state of Idaho gave the counties the right to determine where a corridor may be routed. The counties have selected 7K.

It is disappointing that BLM has ignored the counties proposal of 7K and instead chose route 7C. **Route 7C is an even worse alternative than the original route 7**. Route 7C would severely impact a greater active grouse lek area, a much larger sagebrush habitat, steeper highly erodible land, an area with virtually no roads, to the east and towards the west an area with more pivots, several deep wells, and more residences.

Original route 7 has fewer issues than 7C and has one advantage. This segment of original route 7 has the ability of being sited down the side of a county road that has no existing power lines. I understand that BLM sees the Parting of the Ways as an issue; however, it is a small area and should be easy to site around it. After all, the private land owners are being expected to make compromises for this project; I think BLM can do the same concerning the Parting of the Ways.

Ken Woodworth representing Delmar Woodworth, Woodworth Farms, and Cleft of the Rock Farms

Final EIS Comment Form

Gateway West Transmission Line Project
Final EIS comment period: April 26, 2013 - June 28, 2013

ENTERED 101082

2013 JUN 25 AM 10: 00

RECEIVED DOI-BLM CHEYENNE WYOMING

BLM

Date: 06/19/2013

First Name: N/A Last Name: N/A

Organization or Office Name: Cokeville Development Company

Mailing Address: P.O. Box 55 City: Cokeville State: WY Zip: 83114

Daytime Phone: (307) 279-3393 Email: N/A

[X] Please check here if you wish for your personal information to remain confidential*

*If you wish for your contact information to remain confidential, BLM will protect the personal information that you submit to the extent allowed by law. However, the information may be subject to the Freedom of Information Act (U.S.C. etc.). See privacy note on reverse.

Please submit your comments by **June 28, 2013**. Information submitted on this form is being voluntarily provided solely for the purpose of commenting on the Gateway West Transmission Line Project.

Comment:

The Cokeville Development Company (CDC) directors have reviewed the Final Environmental Impact Statement for the Gateway West 230/500 kV Transmission Line Project in Idaho and Wyoming. The proposed BLM Preferred Alternate, Segment 4, the red line on the attached map, which goes just north of the existing power transmission line is the best option for the CDC. The CDC has been working with the Wyoming Water Development Commission for many years to find a suitable site for an irrigation water storage reservoir within the Bear River Drainage near Cokeville, Wyoming. After many years of studies, the Sublette Creek Drainage now appears to be the best place. If the proposed Gateway West Transmission Line Project does not go north of the existing power transmission line and goes south it would go right through the proposed reservoir site in the Sublette Creek Drainage near Cokeville,

To mail this comment form please send to:

Bureau of Land Management | Gateway West Project | P.O. Box 20879 | Cheyenne, WY 82003

Comments may also be submitted via email to: Gateway_West_WYMail@blm.gov or online at www.wy.blm.gov/nepa/cfodocs/gateway_west

continued on back

Name: Cokeville Development Company

ENTERED 101082

Wyoming. It would be a disaster to ignore many years of studies and financial costs incurred by the State of Wyoming and local residents to find a reservoir site.

The CDC would support the idea to bury the proposed transmission line near the Town of Cokeville so residents will not have any more health or view shed concerns than currently experienced. There is also a safety issue due to the public airport near Cokeville.

We thank you for the opportunity to comment. Please contact us if you have any questions.

Samuel O. Bennion Jr.

Samuel O. Bennion Jr.

CDC Director, Chairman

Privacy Note: Comments, including names and addresses of respondents, will be made available to the public after the close of the official comment period. Please be advised that your entire comment, including your personal identifying information, may be made publicly available at any time. Although you may ask the BLM in your comment to withhold your personal identifying information from the public, we cannot guarantee that we will be able to do so. All submissions from organizations and businesses, and from individuals identifying themselves as representatives or officials of organizations or businesses, will be available for public inspection in their entirety.

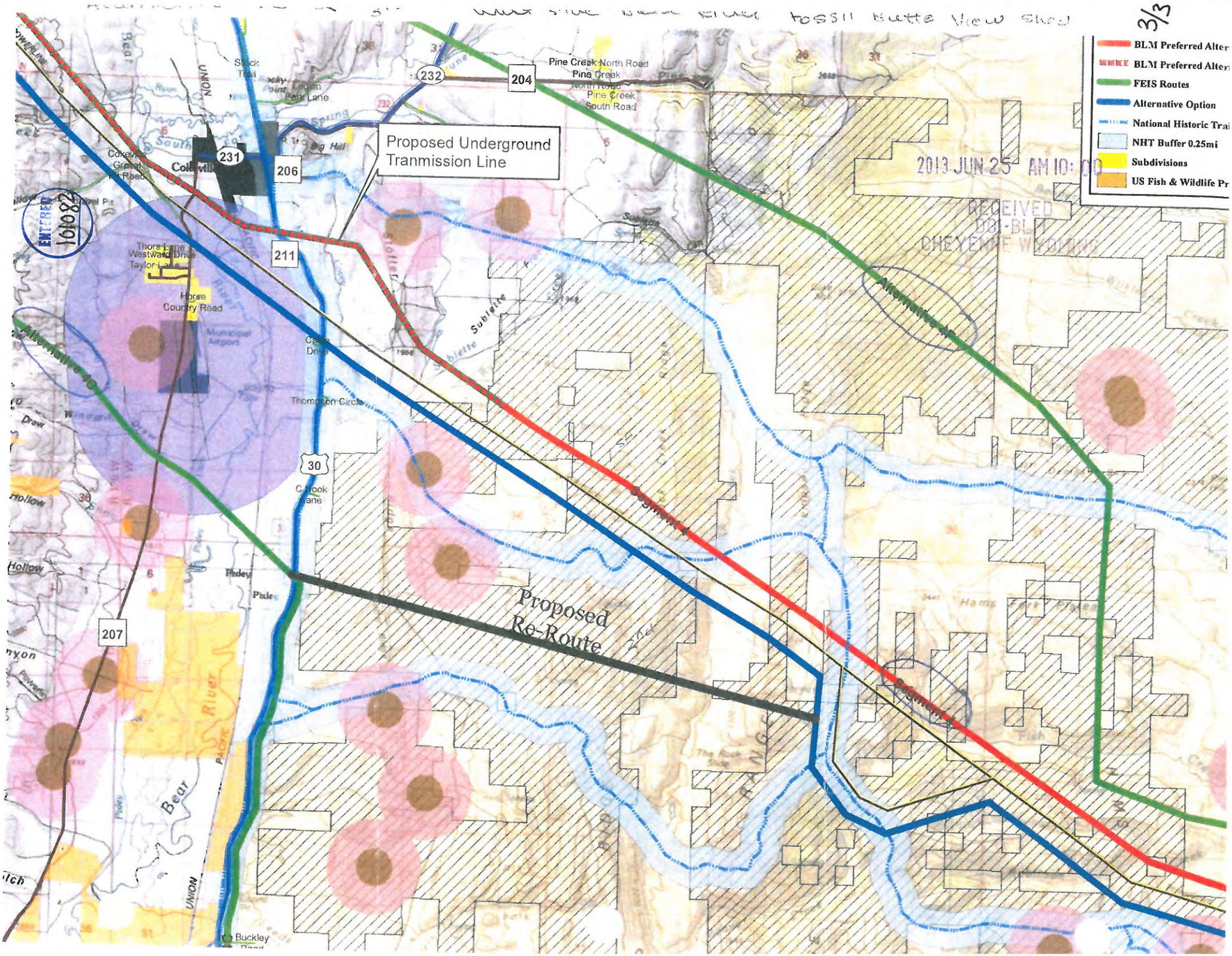
3/3
BLM Preferred Alter
BLM Preferred Alter
FEIS Routes
Alternative Option
National Historic Trai
NHT Buffer 0.25mi
Subdivisions
US Fish & Wildlife Pr
Proposed Underground Tranmission Line
Proposed Re-Route
Segment
Segment
Alternative 10
Alternative 10
Pine Creek North Road
Pine Creek
Pine Creek South Road
Colville
Thors Lane
Westward Drive
Taylor Lane
Horse Country Road
Municipal Airport
Cable Drive
Thompson Circle
Cutbank Lane
Pixley
Bear River
Buckley Road
Sublette
Slotter
Big Hill
Spring
Hams Fork
231
232
204
206
211
30
207
2013 JUN 25 AM 10:00
RECEIVED
BLM
CHEYENNE WYOMING
ENTERED
100082

From: jmclain@blm.gov on behalf of Gateway_West_Trans_Line, BLM_WY
To: blm@gwcomment.com
Subject: 17474 Fwd: Comment to the FEIS for Gateway West
Date: Monday, July 01, 2013 10:27:14 AM
Attachments: BLM FEIS public comment_CCSC-PKTN130627.pdf

---------- Forwarded message ----------
From: **Lisa Ganley** <lisawg@vcn.com>
Date: Thu, Jun 27, 2013 at 4:00 PM
Subject: Comment to the FEIS for Gateway West
To: gateway_west_WYmail@blm.gov
Cc: Peter Nicolaysen <petercn@vcn.com>

To the B.L.M.:

Please find attached the public comment from Cole Creek Sheep Company and Parkerton Ranch, Inc. to the Final Environmental Impact Statement for the Proposed Gateway West Transmission Line Project.

Regards,

Lisa W. Ganley, Administrative Assistant

Nicolaysen & Associates, PC

P.O. Box 7

Casper, WY 82602

307-237-1896
307-577-8799 (fax)

CONFIDENTIALITY NOTICE: This e-mail message and any attachment(s) fall under the Electronic Communications Privacy Act, 18 U.S.C. §§ 2510-2521, and contain confidential, attorney client and/or attorney work product information solely intended for the addressee and protected by attorney-client/work product privileges. If you are not the addressee or have received this e-mail in error, DO NOT read, copy or disseminate its contents, attachments, or information. You are instructed to erase the email, its attachments and information from your email service, hard drive and e-mail server(s) and notify this office via email or telephone and ask to speak with me. Any disclosure, copying, distribution or taking any action in reliance on the contents of this communication is strictly prohibited. Thank you.

COLE CREEK SHEEP COMPANY
PARKERTON RANCH, INC.
P.O. Box 2945
Casper, WY 82602

June 27, 2013

VIA EMAIL AND CERTIFIED U.S. MAIL, RETURN RECEIPT REQUESTED
#7012 3460 0002 3685 2834

Mr. Walt George, BLM Project Manager
Gateway West Project
PO Box 20879
Cheyenne, WY 82003

Gateway_West_WYMail@blm.gov

RE: Comment to the Final Environmental Impact Statement for the Proposed Gateway West Transmission Line Project

Dear Mr. George:

Cole Creek Sheep Company and Parkerton Ranch, Inc. have reviewed the Final Environmental Impact Statement (FEIS) for the proposed Gateway West Transmission Line Project, and submit the following comment:

We commend, support, and appreciate the BLM for its decision to recommend the routing of Section 1W(a) in the existing utility corridor in the FEIS. This route is also the State of Wyoming's preferred route, and overall the appropriate project choice. We also thank Rocky Mountain Power for being available to listen to our concerns and for also selecting the 1W(a) route for this segment of the proposed line. The alternate route, 1W(a)-B, would be simply unacceptable in terms of its impact on resident sage grouse populations and its impairment of and disruption upon the environment and private property.

Please feel free to contact me at the above address or at (307) 237-1896 should you have any questions or need any additional information. Thank you for your time and work on this project.

Sincerely,

Peter C. Nicolaysen
Vice-President

PCN:lwg

COLE CREEK SHEEP COMPANY
PARKERTON RANCH, INC.
P.O. Box 2945
Casper, WY 82602

ENTERED
100908

June 27, 2013

VIA EMAIL AND CERTIFIED U.S. MAIL, RETURN RECEIPT REQUESTED
#7012 3460 0002 3685 2834

Mr. Walt George, BLM Project Manager
Gateway West Project
PO Box 20879
Cheyenne, WY 82003

Gateway_West_WYMail@blm.gov

RE: Comment to the Final Environmental Impact Statement for the Proposed Gateway West Transmission Line Project

Dear Mr. George:

Cole Creek Sheep Company and Parkerton Ranch, Inc. have reviewed the Final Environmental Impact Statement (FEIS) for the proposed Gateway West Transmission Line Project, and submit the following comment:

We commend, support, and appreciate the BLM for its decision to recommend the routing of Section 1W(a) in the existing utility corridor in the FEIS. This route is also the State of Wyoming's preferred route, and overall the appropriate project choice. We also thank Rocky Mountain Power for being available to listen to our concerns and for also selecting the 1W(a) route for this segment of the proposed line. The alternate route, 1W(a)-B, would be simply unacceptable in terms of its impact on resident sage grouse populations and its impairment of and disruption upon the environment and private property.

Please feel free to contact me at the above address or at (307) 237-1896 should you have any questions or need any additional information. Thank you for your time and work on this project.

Sincerely,

Peter C. Nicolaysen
Vice-President

PCN:lwg

duplicate

2013 JUL -3 AM 10:10
RECEIVED
OFFICE OF THE DIRECTOR

1/1

Cole Creek Sheep Company
Parkerton Ranch, Inc.
PO Box 2945
Casper, WY 82602

ENTERED
00 9 9 007

CASPER WY 826
01 JUL 2013 PM 2 L

Mr. Walt George, BLM Project Manager
Gateway West Project
PO Box 20879
Cheyenne, WY 82003

82003$7018

duplicate

January 9, 2013

To whom it may concern:

On behalf of Heglar Creek Farms, I am writing in regards to the proposed Power Transmission Line going through the Raft River Valley in Cassia County. The proposed line would be located nearly over the top of an existing GPS base station. The base station is solar powered, sending correctional signal throughout the valley to 6 farms covering in excess of 20,000 acres. Many of the Farmers have expressed deep concern with the proposed transmission line, and it's probable interference with the correctional signal. The base station is located at N42 degrees 31.214 W113 degrees 16.013 The location of the base station cannot be moved to service the terrain that it covers. I have talked with an Electrical Engineer and asked what would happen to the signal if a transmission line of the proposed size was installed. The answer was that the signal could be affected at random times for no reason. With the probability that the signal could be affected at any time is a very big concern. GPS in Agriculture is important, effective, and a vital part of our crop production. We can't afford the possibility of interference with the correctional signal. We also believe that other routes for transmission lines would have no impact on production agriculture. Thank you for your consideration on this manner.

Sincerely

Michael D. Garner For Heglar Creek Farms

From: Gateway BLM
To: Gateway BLM
Subject: 17144 FW: Gateway West project
Date: Wednesday, April 10, 2013 12:21:49 PM
Attachments: Gateway West 021113.pdf
2006-05-Patel-Lambert.pdf
evaluation of induced stray voltage from transmission lines.pdf
Induced stray voltage from transmission lines.pdf

---------- Forwarded message ----------
From: **Bob Naerebout** <bob@wdbs.us>
Date: Mon, Feb 11, 2013 at 4:53 PM
Subject: Gateway West project
To: 'feedback@ios.doi..gov', mpool@blm.gov, crountre@blm.gov, kgeorgesoon@idahopower.com, wgeorge@blm.gov, David Hensley <dhensley@gov.idaho.gov>, Bonnie Butler <bbutler@gov.idaho.gov>, sellis@blm.gov, dmurphy@blm.gov, Brent Olmstead <brent@mpidaho.com>, Kenneth R McClure <krm@givenspursley.com>, Dan Steenson <dan@sawtoothlaw.com>

Please review the Gateway West letter and the supporting documentation.

Thank you …… Bob

Bob Naerebout
Executive Director
Idaho Dairymens Association
bob@wdbs.us
(208) 308-3382

Idaho Dairymen's Association, Inc.

195 River Vista Place, Suite 308
Twin Falls, ID 83301
Phone: (208) 733-6372
Fax: (208) 735-5955

February 11, 2013

Mr. Ken Salazar
Secretary
U.S. Department of Interior.
1849 C Street NW,
Washington, DC 20240

Washington, DC 20240
Mike Pool
Acting Director
U.S. Bureau of Land Management.
1849 C Street NW, Rm. 5665
Washington DC 20240

Gentlemen,

I am writing to make you aware of concerns the Idaho Dairymen's Association (IDA) has over the proximity of alternate routes for the Gateway West transmission line to dairy operations in Idaho. Our concern, with the alternate routes' proximity to dairy farms and agricultural ground, centers on the economic impact of taking irrigated ground out of production, and for the potential of stray voltage to negatively impact our dairy producers viability.

The Idaho dairy industry is the largest segment of the rural Idaho community with milk sales generating $2.5 billion annually which is 33% of the total Idaho agricultural receipts. The IDA was established in 1944 with the purpose of developing and sustaining an economically viable Idaho dairy industry. In 2003 the IDA formed the Idaho Dairy Environmental Action League (IDEAL) to address environmental and legal issues such as this. We believe the alternate route challenges our ability to "sustain" certain operations and we would greatly appreciate your willingness to take into consideration those concerns when determining where the transmission lines should be placed.

Stray voltage is not isolated to Idaho and several court decisions have found in the favor of dairy operations in Idaho and across the United States because of the negative impact of stray voltage on those operations. The most recent case we have been following has been tied up in the Utah court system for the past ten years. That case involves dairy producers located by the Intermountain Power Project (IPP) located in Delta, Utah.

The Idaho dairy industry through IDA and IDEAL is willing to invest, if necessary, the time and resources that would be required to protect their animals, property and economic viability. The Gateway West alternate route in the Kuna, Idaho area places the transmission lines within a quarter of a mile of some of our dairy operations. That close proximity to dairy operations raises major concerns for our industry.

I have attached three technical articles that discuss induced voltages from transmission lines that will help explain our concerns with having high voltage transmission lines in close proximity to dairies. The articles discuss potential stray voltage issues with a distribution line running parallel to a nearby transmission line leading to stray voltage on customer property. The articles also provide results of computer modeling on various system attributes that could contribute to stray voltage from transmission lines.

This is a serious issue to our industry, providing an adequate buffer between our dairy operations and the transmission lines is critical.

Please contact me with any questions. I can be reached by phone at 208-308-3382 or by email at bob@wdbs.us

Sincerely,

Bob Naerebout
Executive Director
Idaho Dairymen's Association

Cc
Carl Rountree Director Office of National landscape Conservation System and Community Programs.
Keith Georgeson, Project Leader Idaho Power Company.
Walt George, BLM Project Manager.
Steve Ellis, State Director Bureau of Land Management Idaho State Office.
David Murphy, Branch Chief Bureau of Land Management Idaho State Office.
David Hensley, Chief of Staff, Governor Butch Otter
Bonnie Butler, Office of Governor Butch Otter.
Brent Olmstead, Executive Director Milk Producers of Idaho
Ken McClure, Milk Producers of Idaho legal council
Dan Steenson, Idaho Dairymen's Association legal council

Evaluation of Induced Stray Voltages from Transmission Lines using EMTP

Nagy Abed, *Senior Member, IEEE*, Sasan Salem, *Member, IEEE*, and Jim Burke, *Fellow, IEEE*

***Abstract*-- The purpose of this paper is to study the effect of transmission system parameters and operating conditions on generated stray voltage levels. . This includes the transmission line conductor configurations, line loading levels, grounding system parameters, the feeder configuration (radial or ring configuration) and unbalance loading. This enables a better way to understand how different electrical parameters impact the level of NEV and currents at points of interest during different utility operating conditions. Excessive stray voltages levels may have a negative effect on dairy farm cows and endanger personnel safety. EMTP was used to simulate the coupled electromagnetic-power circuit system. EMTP models of the poles and the line phase, neutral, and ground wire were built to represent the transmission line electromagnetic behavior and the stray voltage generation mechanism. The parameters of the proposed models were obtained from the technical literature. Different simulations were conducted by varying the system parameters and operating conditions. A discussion of these results is presented.**

Index Terms—Stray Voltage, Induction, Transmission Line, Earth, Earth Current, Ground, Step Potential, Touch Potential

I. Introduction

Stray voltage in power systems has been studied prior to the 1970's. Stray voltage is a special case of neutral-to-earth voltage (NEV); it differs from NEV because it is defined at a specific location [1]. Stray voltage in power systems has been studied prior to the 1970's. It was typically considered normal, with some issues arising from the dairy industry, pig farms owners, sensitive electronic loads and pool owner. In the case of transmission lines, however, stray voltage is normally the result of induction. Stray voltage has stirred significant public attention. The "danger" of stray voltage has been exaggerated in some articles in the press.

The reaction of animals to stray voltages varies with the amount of the voltage. Animals are more sensitive to small voltages than humans, and will react to voltages that humans cannot feel. The Wisconsin Public Service Commission defines a "level of concern" of 1 V for the cow contact voltage, which corresponds to 2 mA of current through a 500 Ω resistor [3]. The Symptoms reportedly attributed to significant levels of stray voltage include [1, 2,3]:

1. Decreased milk production of dairy cows
2. A change in the animal's behavior (e.g. Animals' reluctance to eat or drink from a feeder, erratic behavior, May not drink enough water etc)
3. Improper operation of sensitive electronic loads

Stray voltage at barns is normally measured across a 500-Ω resistor, which represents the typical resistance of a cow.

The effect of stray voltage on humans depends on their contact resistance and their body resistance (i.e. current). There are a number of references used in the industry that discuss the resistance of the human body. The body's internal resistance is about 300Ω. Resistance including the skin contact resistance is in the range of 500 to 5000 Ω [3, 8] but varies widely. Electrocution can occur for currents through the heart on the order of 60 to 100 mA; 250 mA through the heart is almost always fatal [3]. These levels of current interfere with the heart's internal electrical pacemaker and force the heart to stop beating properly. During this ventricular fibrillation, the heart muscle fibers contract erratically and unpredictably, leading quickly to death from lack of oxygen to the brain.

The following factors contribute to induced stray voltages on transmission lines:

1- Unbalanced currents in the transmission line conductors

2- Transmission line conductors configuration (pole configuration and untransposed lines)

3- Additive phase angles between the induced and load related currents in neutral system

4- Soil resistivity along the transmission line

Neutral-to-earth voltages cannot be studied using existing load-flow programs. To accurately model stray voltage, a more general steady-state circuit analysis program such as EMTP is needed. Accurate modeling involves modeling the neutral and the individual grounding electrodes [3].

This paper describes a case study involving induction related stray voltage concerns, simulation, and measurement, under different operating conditions.

II. System Modeling

This section deals with the modeling methodology utilized to simulate and measure the stray voltage. Figure 1 shows the

Nagy Abed, Sasan Salem , and Jim Burke are with Quanta Technology, ,Raleigh, NC, USA (nabed@quanta-technology.com, ssalem@quanta-technology.com, jburke@quanta-technology.com)

978-1-4244-6551-4/10/$26.00 ©2010 IEEE

schematic diagram of the 13.8 kV transmission test system used for the study.

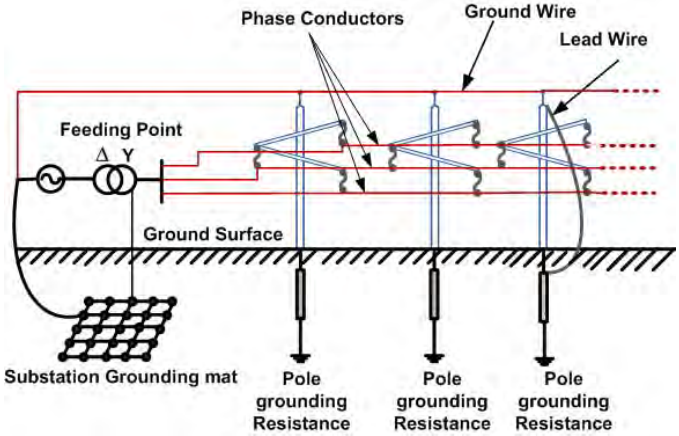

Fig. 1 Schematic Diagram of the Modeled Transmission Line System

The transmission line model utilized in the study is a distributed Constant Parameter (CP) model. The model is based on the Bergeron's traveling wave method [6]. In this model, the wave equation is solved to obtain the line operating characteristics (current, and voltage).

The transmission line parameters per unit length were obtained from geometrical and physical information (line dimensions (the distances between the conductors), height above ground, conductor and soil resistivity).

For multiphase system the wave equations are written in the matrix form:

$$\frac{d^2V}{dx^2} = Z'Y'V \tag{1}$$

$$\frac{d^2I}{dx^2} = Z'Y'I \tag{2}$$

Where:

$[Z'] = [R'] + s[L']$ Series Impedance per unit length

And $[Y'] = [G'] + s[C']$ Shunt Branch per unit length

The multiphase line is transformed into a decoupled set of modal circuits as shown in Figure 2.

With eigenvalue theory, it becomes possible to transform the above two coupled equations from phase quantities to modal decoupled quantities. The multiphase line is transformed into a decoupled set of modal circuits. The equations are then solved to obtain the transmission line terminal response.

Equations (1) and (2) are transformed into model domain

$$-\frac{d\hat{V}}{dx} = T_v^{-1} Z' T_i \hat{I} \tag{3}$$

$$-\frac{d\hat{I}}{dx} = T_i^{-1} Y' T_v \hat{V} \tag{4}$$

Where $V = T_v \hat{V}$, $I = T_i \hat{I}$ and $T_i = (T_v^t)^{-1}$

The completely decoupled equations (3) and (4) are then solved to obtain the transmission line terminal response.

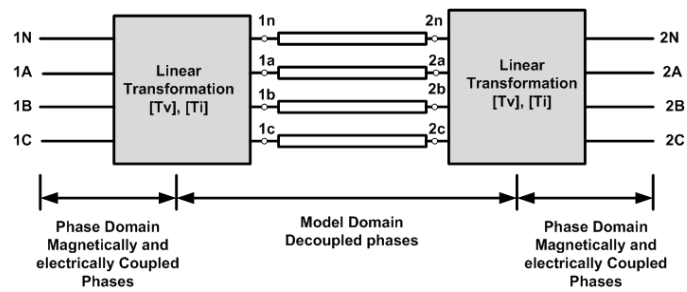

Fig. 2 The Distributed Constant Parameters Line Model

The neutral of the overhead line is often grounded at intervals along the line as required by IEEE National Electric Safety code [11]. Figure 3 illustrates two segments of three phase multigrounded line model (Carson's model).

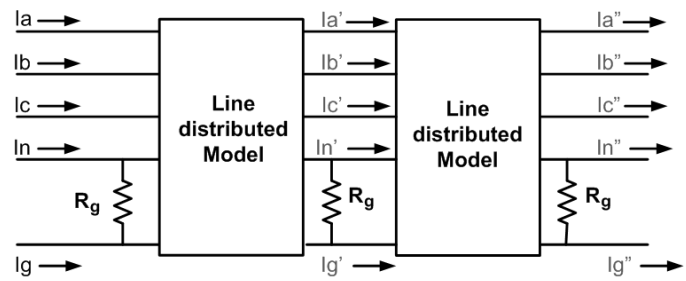

Fig. 3 Two segments of a multigrounded three phase line

In this study, a transmission system with 160 poles was modeled. The transmission line consists of untransposed three wires with a static wire. The transmission line is grounded every four poles. Appropriate data was obtained to model poles, lines, shield wires, ground rods, and the substation grounding.

Unbalanced currents on transmission lines, caused by unbalanced load and/or un-transposed lines induce a voltage on parallel lines including ground wires, communication lines, and other transmission or distribution wires. The study was conducted for balanced and unbalanced loading and with uniform pole configuration. The induced voltages are considered to be steady state and 60 Hz so; they manifest similar characteristics to "stray voltage".

III. Simulations and Results

A transmission system with 160 poles was modeled to determine the impact of various system parameters on the generated stray voltage level. For this purpose the following system parameters were studied:

- Equivalent of substation grounding mat resistance
- Line loading
- Pole ground rod resistance
- Line Span length
- Unbalanced line loading
- The transmission line boundary conditions (i.e. radial or dual supply)

a. Impact of Substation Grounding Resistance on the Generated Stray Voltage

The effect of substation grounding on the stray voltage

levels is first examined using five substation grounding resistance: 0.1, 0.25, 0.5, 0.75 and 1 Ω respectively. A series of cases were conducted in which the substation ground resistance was changed and stray voltage levels were recorded for both radial and dual supply feeder.

Figure 4 shows the generated stray voltage in volt that result from these cases for dual supply feeder. From the results, it can be seen that the change in the substation resistance from 0.1 ohms to 1.0 Ohm will increase the measured stray voltage levels significantly. It is of interest that there is a significant difference between 0.1Ω and 0.5Ω, but above 0.75Ω, changes in the substation grounding resistance have less effect on the generated stray voltage levels.

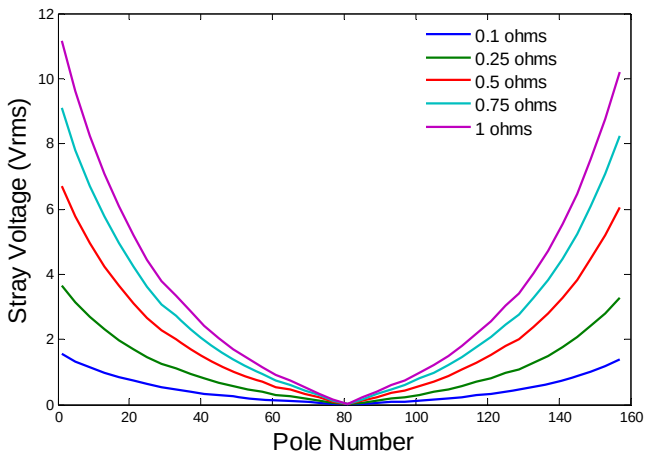

Fig. 4 Impact of Substation Grounding on SV level for dual supply feeder

Most substation grounds are generally assumed to be on the order of 1 ohm (or higher in distribution substations). The stray voltage rises particularly on the poles in the vicinity of the substation, which is consistent with the results of other papers on this topic.

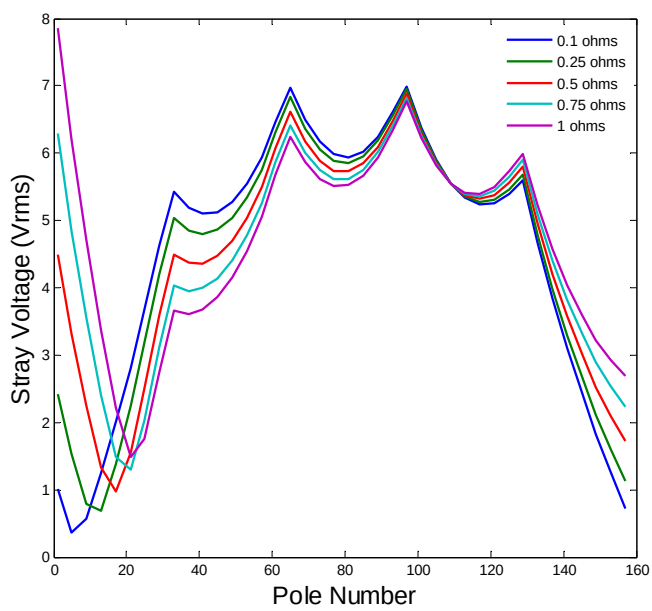

Fig. 5 Impact of Substation Grounding on SV level for radial feeder

Figure 5 shows the generated stray voltage for different substation grounding values for radial feeder. By increasing the substation resistance from 0.1 ohms to 1.0 Ohm the stray voltage will increase significantly at both terminal of the line while the values between the two terminals varies differently from the two way feed feeder case. The results show that there is a significant difference between 0.25Ω and 0.5Ω, but above 0.75Ω, changes in the substation grounding resistance have less effect on the generated stray voltage levels.

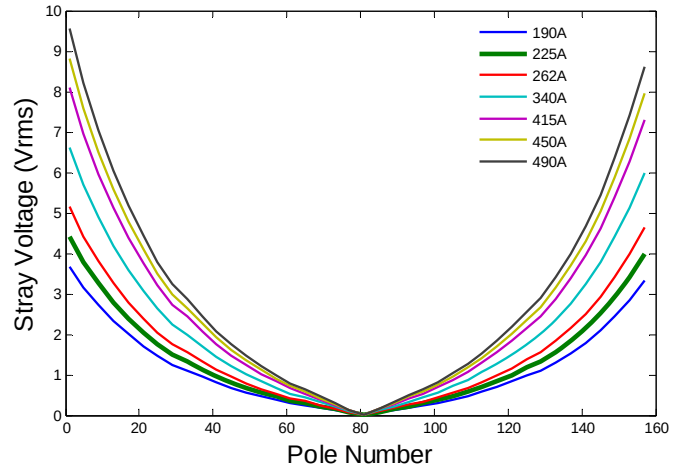

Fig. 6 Impact of Line loading on the Generated SV Level for dual supply feeder

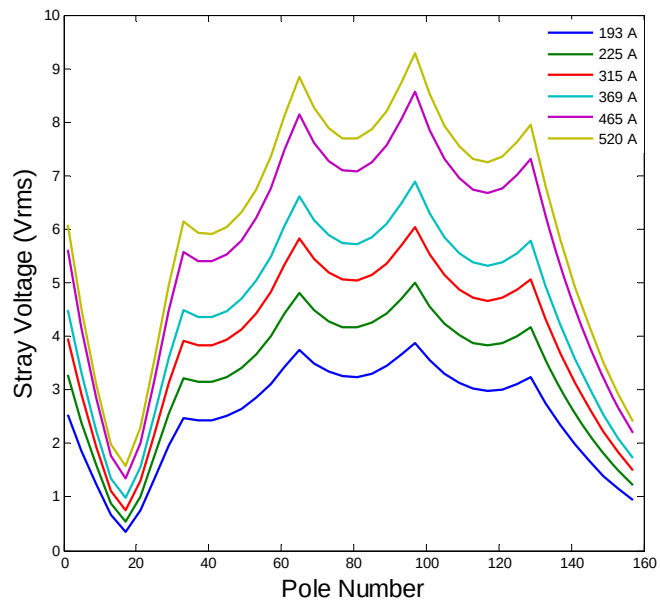

Fig. 7 Impact of Line loading on the Generated SV Level for radial feeder

b. Impact of Line Loading on the Generated Stray Voltage

To examine the effect of transmission line current loading on the generated stray voltage levels, different loading cases were simulated and the generated stray voltage levels were measured.

Figure 6 and 7 shows the stray voltage levels for various line currents for dual supply feeder and radial feeder respectively. As was expected, higher line currents induce higher voltages in the shield wire and the stray voltages will increase accordingly.

c. Impact of Pole Grounding Resistance on the Generated Stray Voltage

In this part of the study, the pole grounding resistance is varied between 5-200 ohms to study the relationship between the induced stray voltage levels and the pole grounding. These range represent typical high and low pole grounding resistance.

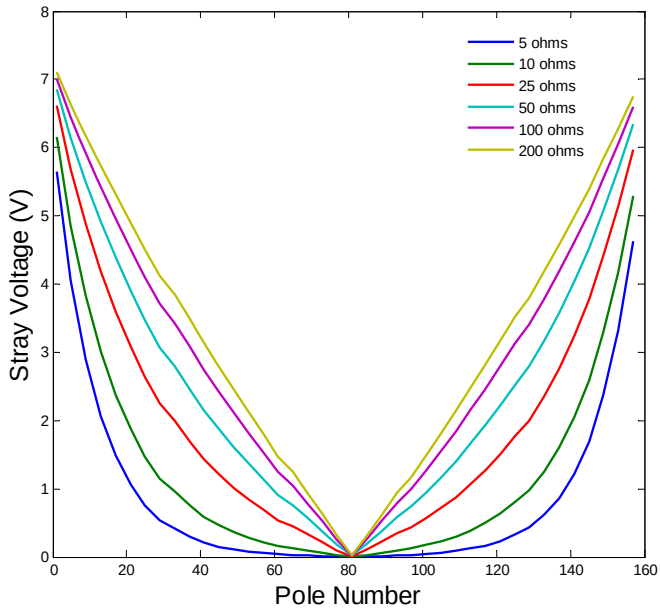

Fig. 8 Impact of Pole Grounding Resistance on the SV Level on dual supply feeder

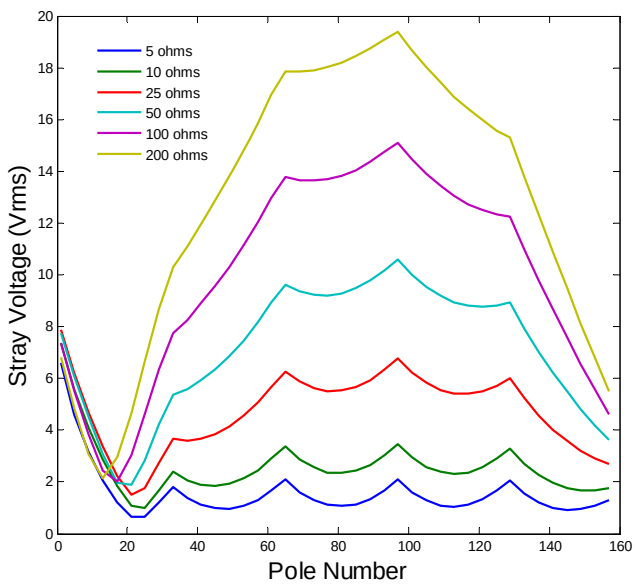

Fig. 9 Impact of Pole Grounding Resistance on the SV Level on radial feeder

The impact of pole ground rod resistance on stray voltage is shown in Figure 8 for dual supply feeder. The simulation results demonstrate that there is a significant difference between 5Ω, 10Ω and 25Ω, but above 50Ω, changes in the pole grounding resistance have less effect on the generated stray voltage levels. In many areas, it is very difficult to drive ground rods to attain values less than 50 ohms, so the impact of grounding, to reduce stray voltage, might be considered minimal for most transmission lines.

The impact of pole ground rod resistance on stray voltage is shown in Figure 9 for radial feeder. The simulation results demonstrate that there is a significant difference for pole grounding resistance values above 25Ω, but below 10Ω, changes in the pole grounding resistance have less effect on the generated stray voltage levels.

d. Impact of Line Span on the generated Stray Voltage

In order to evaluate the line span effect on the generated stray voltage, a series of simulations was conducted in which the line span was changed. The line span was changed between three values: 40, 50, and 60 meters respectively. Figure 10, and Figure 11 shows the impact of the line span length on the stray voltage for dual supply feeder and radial feeder respectively. The simulation results demonstrated the line span length has a little impact on the stray voltage level.

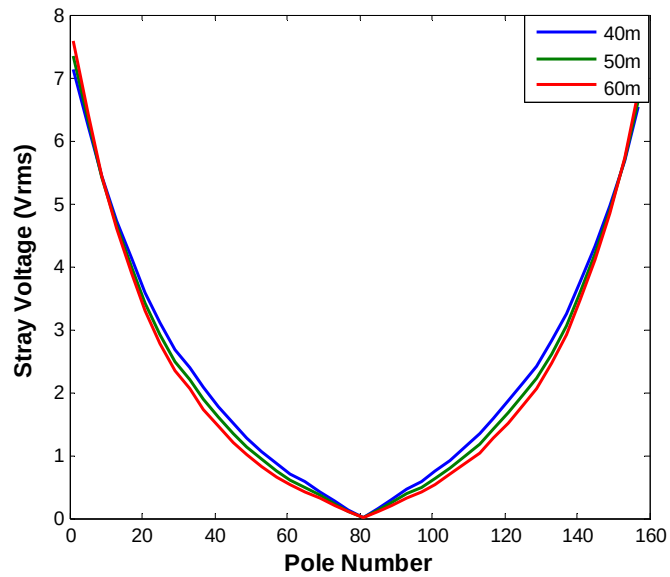

Fig. 10 Impact of Line Span on the SV Level on dual supply feeder

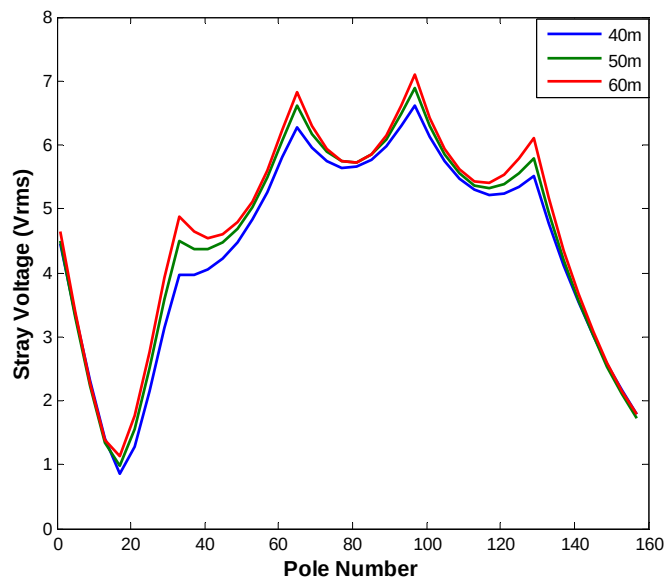

Fig. 11 Impact of Line Span on the SV Level on radial feeder

e. Impact of load unbalanced on the Stray Voltage

To evaluate the impact of unbalanced loading on the stray voltage the transmission line loading was changed to create currents unbalance one of the phases. The loading unbalance was varied between 2% to 20%.

Figure 12 shows the stray voltage levels results for different unbalance loading for dual supply feeder. The results show that stray voltage increases with the increase in the unbalance (the zero sequence current).

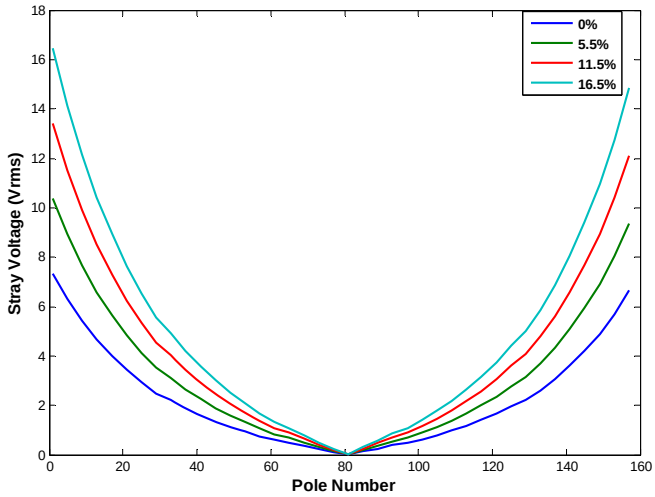

Fig. 12 Impact of unbalance loading on the SV Level on dual supply feeder

Figure 13 shows the stray voltage levels results for different unbalance loading for radial feeder. The results show that the stray voltage increases with the increase in the unbalance in the system.

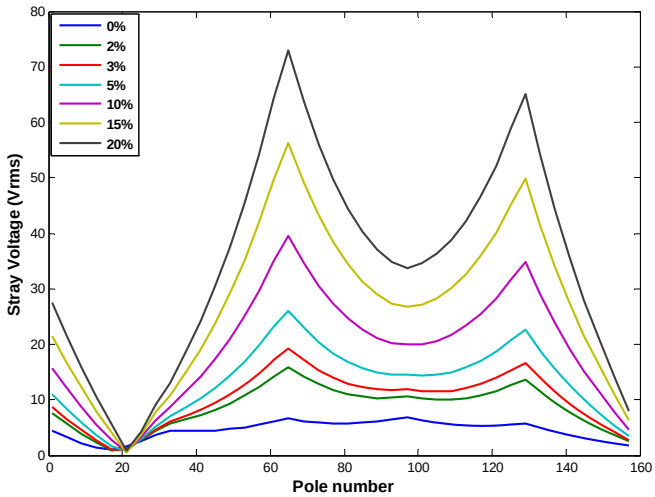

Fig. 13 Impact of unbalance loading on the SV Level on radial feeder

IV. CONCLUSIONS

An EMTP based methodology was developed for simulation and analysis of stray voltage (SV) and neutral-to-earth voltage (NEV) levels as well as the neutral currents along the transmission system under several types of system conditions, or grounding. This enables a better way to understand how different electrical parameters impact the level of SV and currents at points of interest during different utility operating conditions.

Transmission lines induce stray voltage levels for virtually all voltages and configurations. Also, transmission lines will usually cause stray voltage that, measured with a voltmeter, may exceed the threshold limits of regulatory bodies. The effect of the stray voltage on humans and animals is highly affected by the surrounding condition (earth resistivity, contact resistance, etc).

Finally, the main conclusions for this analysis are:

- Substation grounding has a significant impact on SV levels
- Line loading plays a significant role in SV levels
- Unbalanced transmission line current loading increases the stray voltage levels.
- Line Span length does not have much impact on the SV.
- The stray voltage profile depends on the transmission line boundary conditions.

V. REFERENCES

[1] A.M. Lefcourt, "Effects of Electrical Voltage/Current on Farm Animals: How To Detect and Remedy Problems," U.S. Department of Agriculture, Agriculture Handbook No. 696, 1991.

[2] J. Burke, "The Confusion Surrounding Stray Voltage", 2007 IEEE Rural Electric Power Conference, P. C1-C5.

[3] T.A. Short, "Electric Power Distribution Handbook", CRC press, 2004

[4] E. R. Collins, and J. Jiang, "Analysis of Elevated Neutral-to-Earth Voltage in Distribution Systems With Harmonic Distortion" IEEE Transaction on power delivery, Vol. 24, No.3, July 2009

[5] D. J. Ward, J. F. Buch, T.M. Kulas, and W. J. Ros, "An Analysis of the Five-Wire distribution system" IEEE Transaction on power delivery, Vol. 18, No.1 Jan 2003

[6] T. C. Surbrook, N. D. Reese, A. M. Kehrle," Stray Voltage: Sources and Solutions", IEEE Transactions on Industry Applications, Vol. IA-22, No. 2, March 1983.

[7] M. E. Galey, "Benefits of performing unbalanced voltage calculations," IEEE Transactions on Industry Applications, Vol. IA-24, No. 1, Jan-Feb 1988, pp. 15-24.

[8] J. Burke, *Power Distribution Engineering: Fundamentals and Applications*, Marcel Dekker, INC., 1994.

[9] J. Burke, C. Untiedt, "Stray Voltage: Two Different Perspectives" – IEEE REPC 2008

[10] IEEE Std. 80-2000, IEEE Guide for Safety in AC Substation Grounding.

[11] IEEE Std. C2-2007 The National Electrical Safety Code,2006

Nagy Abed (M'07-SM'09). He received his B.Sc. and M.Sc. degrees from Mansoura University, Egypt, and his PhD from Florida International University, Miami. His research interests include power system modeling, fault diagnosis, power quality, FACTS devices, Application of Finite Element in power system and real time control with HIL. He published more than 43 articles and technical papers in refereed Journals and Conference Proceedings.

Sasan Salem is a Principal Engineer with Quanta Technology. He received his BS in Electrical Power Engineering form Iran university of Science and Technology and his M.Sc. from Concordia University in Montreal. His main research interests include power system analysis and control and FACTS applications in power systems.

Jim Burke is an Executive Advisor with Quanta Technology. He has been in the industry over 43 years. He is the former chair of the IEEE Distribution Subcommittee as well as the Working Group on Distribution Neutral Grounding. He is a Fellow of the IEEE

Induced Stray Voltages from Transmission Lines

Shashi Patel, *Senior Member, IEEE and* Frank C. Lambert, *Senior Member, IEEE*

***Abstract*— Stray voltages are inherent in four-wire multigrounded distribution systems. At the customer's premise, these voltages result from the interaction of multiple parameters of the primary and secondary neutral systems. The causes of stray voltages typically include large unbalanced loads in the neutral system, high neutral impedance, and lack of equipotential grounding at the customer's premise. Non-conventional sources of stray voltages may also exist. These sources may consist of large triplen harmonic currents on the neutral system or induction from a nearby transmission line. This paper describes a case study involving induced stray voltages on a single phase distribution line running parallel with a 500 kV transmission line.**

***Index Terms*—stray voltage, induction, transmission line**

I. Introduction

It is not uncommon for a distribution line to co-exist with a transmission line, either on the same right-of-way or as an underbuilt circuit. For such distribution lines, high neutral to earth voltages (N-E voltages) due to induction are always a concern. Underbuilt distribution lines are subject to higher NEVs due to close proximity of the transmission line.

The following factors contribute to induced stray voltages on a distribution line:

- Currents in the transmission line conductors
- Proximity of the distribution line to the transmission line
- Length of the parallel section
- Additive phase angle between the induced and load related currents in the neutral system
- Soil resistivity along the parallel section

This paper describes a case study involving induction related stray voltage concern, measurement, analysis, and mitigation.

II. Concern

This project investigated stray voltage concerns caused by a 500 kV transmission line. The transmission line parallels a one mile section of a 13 kV distribution feeder and is believed to be the primary source for the stray voltage. When the problem was first detected, approximately 18 volts was measured at a customer's spigot. At the time of the investigation, the customer and his daughter each owned a house at the southern end of the parallel section.

Initially, the utility company carried out several investigations and applied various mitigation means on the feeder and at the customers' houses. The most effective mitigation means was the installation of surge arresters between the primary and secondary neutrals at the two houses. Although the stray voltage problem was effectively mitigated, concerns for other customers along the parallel section remained. Future expansion in the area was another reason why the utility company owning the distribution system wanted stray voltage mitigation for the entire tap.

III. Scope

The project scope included measuring stray voltage and related parameters, identifying various stray voltage sources, and finally recommending mitigation means that could be effectively applied. A computer program was used to model the transmission and distribution systems. NEETRAC validated the computer model first by comparing the analyzed data with the measured data. In the next step, source identification and mitigation analysis were performed. Based on this analysis, NEETRAC made recommendations for effective mitigation of stray voltages along the parallel section.

IV. Identification of Stray Voltage Sources

The first set of measurements consisted of identifying stray voltage sources such as a corroded neutral or a low voltage, high impedance fault in the area. The measured data showed that these sources were not present in and around the customer houses. The next set of tests focused on measuring stray voltages due to induction from the 500 kV transmission line and those due to the load current in the neutral. NEETRAC's measurements and the prior measurements performed by the utility company identified these two sources as the main contributors for the stray voltage problem on the tap line.

Prior to NEETRAC's involvement, the utility company had measured the stray voltages with the transmission line energized and de-energized. These measurements indicated that the induction from the 500 kV transmission line contributed approximately 73% and the load current in the neutral contributed the rest. The computer study provided more insight into the nature of these two stray voltage sources

Manuscript received April 11, 2005. This work was supported by the Georgia Transmission Corporation. S. G. Patel (e-mail: Shashi.Patel@neetrac.gatech.edu) Frank C. Lambert (e-mail: Frank.Lambert@neetrac.gatech.edu) and are with the National Electric Energy Testing Research and Applications Center (NEETRAC) who performed the subject work. NEETRAC is a Center of The Georgia Institute of Technology.

0-7803-9193-4/06/$20.00 ©2006 IEEE.

and also helped understand the relationship between them. Understanding this relationship aided NEETRAC in recommending appropriate mitigation means.

Figure 1 shows the computer model used for the analysis. A total of five different operation scenarios, as listed below, were studied:

1. 500 kV line opened at TSub-A only *
2. 500 kV line opened at TSub-B only *
3. 500 kV line opened at both substations *
4. Distribution line de-energized with the 500 kV line carrying full load
5. Distribution and 500 kV lines carrying full load (Base Case)

* Distribution line de-energized

Figure 1 also shows the neutral currents and N-E voltages at key locations for the five scenarios described above. Comparing the base case data (Scenario 5) with the data for other operating scenarios helped determine the contributions made by various stray voltage sources.

The data in Figure 1 indicates that the N-E voltages along the tap line are almost entirely dictated by the load flow in the 500 kV transmission line. The phase angle difference between the voltage caused by the induction and that caused by the distribution loads is such that the latter source has virtually no influence in the net N-E voltage at the customer's premise. For example, the "base case" N-E voltage at the customer's premise is 14.3 volts. This N-E voltage includes the contribution made by various loads on the distribution system. When the entire distribution system is de-energized, the N-E voltage at the customer's premise remains almost the same, 14.5 volts.

V. MITIGATION

The next step consisted of evaluating several mitigation means for their effectiveness in reducing the stray voltage at the customer's premise. In each case, the mitigation effectiveness was determined by comparing the corresponding stray voltage with that for the "base case".

The following mitigation methods were evaluated:

1. Isolating the primary neutral from the secondary neutral at the customer's transformer.
2. Moving the distribution tap line 2,500 feet from the transmission line.
3. Installing a 5 Ω ground well at each pole along the distribution tap line.
4. Bringing an additional two phases to the customer's transformer and balancing the load.
5. Installing a continuous counterpoise, 2/0 copper conductor, along the distribution tap line and connecting to the downlead at each pole.
6. Installing primary isolation transformers along the distribution tap line.

With the exception of Mitigation #5 (continuous counterpoise along the distribution tap line), all of the mitigation means were evaluated with the computer model. Because the software used for this investigation is not capable of modeling a continuous counterpoise in a mutually coupled system, this evaluation consisted of installing the counterpoise along the tap line and measuring the N-E voltages.

<u>Mitigation Methods 1 through 4 (Neutral Isolation, Tap Relocation, 5 Ω Pole Ground, and Three Phase Tap Line)</u>

For an individual customer, the most effective mitigation means is isolation of the primary neutral from the secondary neutral at the customer's transformer. The utility company had initially installed neutral isolators at the customer's transformers. During maximum loading conditions, the voltages across the blockers were exceeding their ratings, thereby rendering them ineffective. The blockers were then replaced with 3 kV surge arresters.

Following installation of surge arresters, stray voltages at the houses reduced to extremely low values. The computer data also showed that the "base case" N-E voltage at the customer's premise reduced from 14.3 volts to 0.01 volts. However, the N-E voltage on the primary side increased from 14.3 volts to 15.7 volts. This voltage appears at the neighboring houses which are not protected with neutral isolators. In general, the increase in the N-E voltage on the primary side following the neutral isolation is in inverse proportion to the resistance of the grounding system at the customer's house.

Minimizing induction from the transmission line as a mitigation means was also studied. One approach to reduce induction is to move the distribution tap line away from the 500 kV transmission line. In addition to increasing the separation distance between parallel line sections, the effectiveness of this mitigation method also depends on the soil resistivity values in the area. The soil resistivity along the distribution tap line, as determined in the past investigations, is extremely high. As a result, it was anticipated that the tap line would have to be relocated a significant distance from its present location for the desired reduction in induced voltage.

The computer analysis indicated that the distribution tap line would have to be relocated approximately 2,500 feet from the 500 kV transmission line to reduce the "base case" N-E voltage at the customer's premise by 40%. In addition to the cost, this solution was also impractical to implement due to its adverse effects on the customers that are presently served by the distribution tap line.

Installing a low resistance ground at each pole along the entire length of the distribution tap line was also analyzed. The computer study indicated that installing a ground well with approximately 5Ω resistance at each pole could reduce the customer's N-E voltage by 40%.

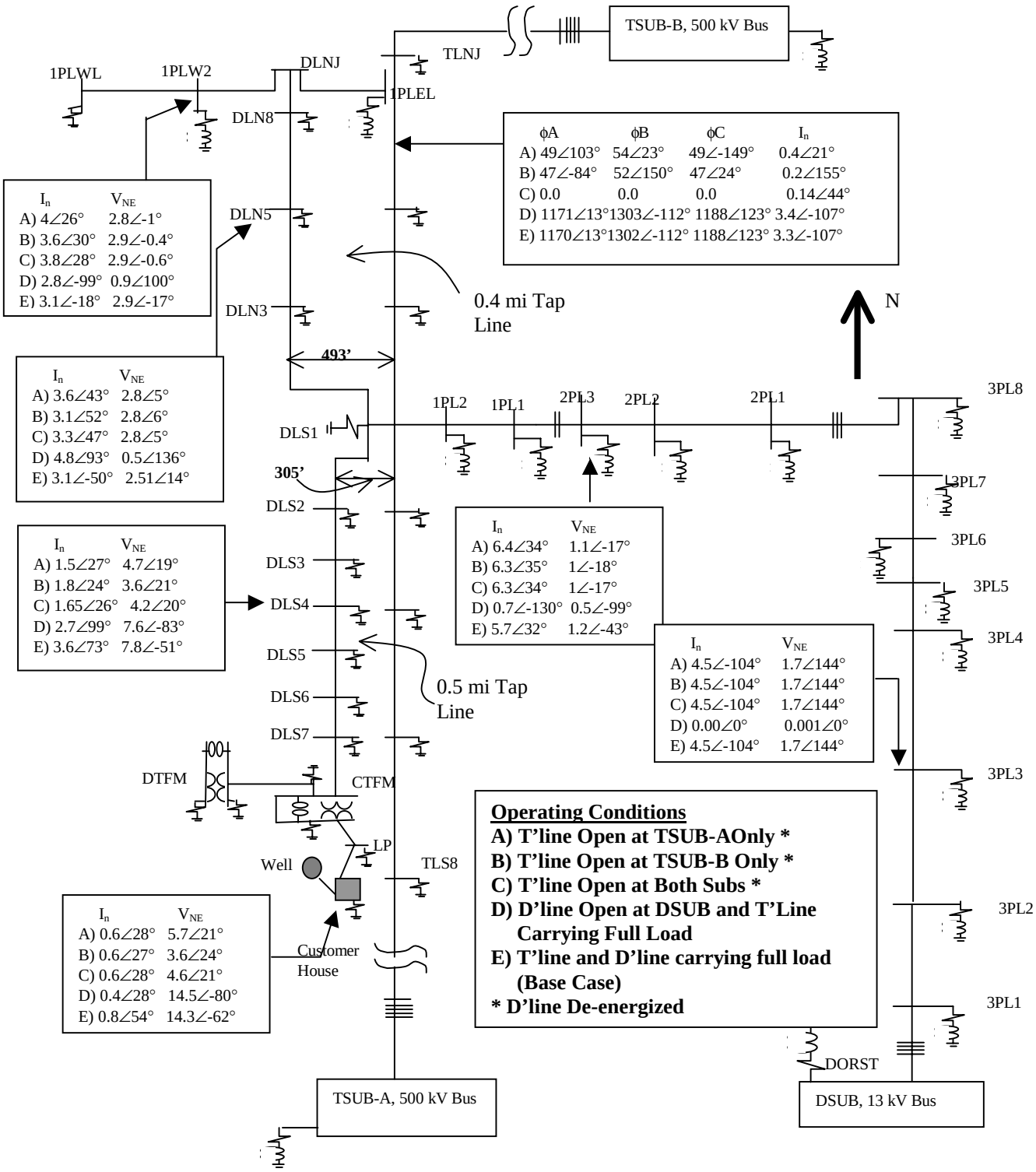

Figure 1: Distribution System Neutral Currents and N-E Voltages due to Various System Operating Conditions - Source Identification

Drilling eight ground wells, one at each pole, is an expensive solution. Also, there is no guarantee that the goal of achieving 5Ω resistance at each pole can be met in high resistivity, sandy soil.

Since the distribution load provides only a small contribution to the stray voltage problem, bringing in an additional two phases to the customer's transformer and balancing the load was not expected to offer much improvement. The computer analysis confirmed this conclusion. The N-E voltage at the customer's premise actually increased from 14.3 volts to 16.3 volts when the entire distribution tap line was modeled as a three phase line with nearly equal loads on each phase.

Mitigation Method 5 (Continuous Counterpoise)

Although installing 3 kV surge arresters effectively solved the stray voltage problem, the utility company had concern regarding future load growth, particularly in the area beyond the customer's house. This and safety related concerns for using 3 kV surge arresters for isolation prompted the utility company to look for mitigation means that could reduce the influence of induced voltage and current along the distribution tap line. In response to this need, NEETRAC recommended installation of a continuous counterpoise (2/0 bare copper conductor) along the distribution tap line. Due to modeling limitations, the effectiveness of this solution could not be evaluated.

The utility company installed the continuous counterpoise from the customer's transformer (CTFM) to the pole at DSL for evaluation (Figure 1). This counterpoise was connected to the downlead at each pole along the tap. Additional ground rods were also installed and connected to the counterpoise at each pole. The voltage measurements obtained at the customer's transformer following the installation of the counterpoise showed no improvement. The utility personnel measured 15.5 volts from the transformer ground to a remote probe and 16.5 volts across the surge arrester providing the neutral isolation.

Mitigation Method 6 (Isolation Transformers along the Distribution Tap Line)

The induced voltage is directly proportional to the length of the parallel lines. In the present case, approximately one mile of single phase distribution tap line parallels the 500 kV transmission line. Breaking up the total length of the parallel section into one or more smaller sections should reduce the induced voltage on each section. This mitigation method was analyzed using the computer model. A field installation including the measurements followed this computer analysis. Figure 2 shows the neutral currents and N-E voltages at some key locations for four different combinations of isolation transformers and their locations between the customer transformer and the tap point (DSL1). Note that the mitigation effectiveness of each transformer / location combination can be determined by comparing the corresponding N-E voltage with the "base case" N-E voltage.

Referring to Figure 2, the isolation transformer at DLS5 reduces the N-E voltage at the customer transformer significantly. However, N-E voltages increase between DLS5 and DLS1. Placing an additional transformer at DLS1 reduces these N-E voltages.

NEETRAC and the utility company involved felt that field tests should be performed to validate the effectiveness of isolation transformers as indicated in Figure 2. Since isolation transformers for primary system applications are not routinely manufactured, obtaining such a transformer with short notice was difficult. The field tests, as a result, were performed by installing two 7.6kV/240-120V, 50 kVA transformers connected back-to-back. The transformers were mounted on a wood pole at DLS1.

Table 1 shows the N-E voltages measured at the customer's transformer, both with and without the isolation transformers connected at DLS1. For comparison, the table also shows the computed data.

Referring to Table 1, isolation transformers located at DLS1 reduce the N-E voltage between the customer's primary pole ground to a remote probe from 14.7 volts to 5.3 volts, a 64% reduction. A similar reduction was recorded in the N-E voltage across the secondary neutral isolator (3 kV surge arrester) at the customer's transformer.

For an isolation transformer to be effective, the telephone or cable TV shield wires must not be continuous across the transformer. Table 1 shows that the computed data are in good agreement with the measured data once the telephone shield wires were isolated across the transformers.

Table 1 Validation of Isolation Transformer Effectiveness – Two 7.6kV/120-240V Transformers Installed Back-to-Back at DLS1 (Figure 2)

Test Scenario	Measured V_{NE} (Volts)	Computed V_{NE} (Volts)
No isolation transformer (Base case)	14.7	14.3 ∠-62°
Primary isolation transformer at DLS1, telephone shield across isolation transformer continuous	8.4	Not calculated
Primary isolation transformer at DLS1, telephone shield across isolation transformer isolated	5.3	5.5 ∠-67°

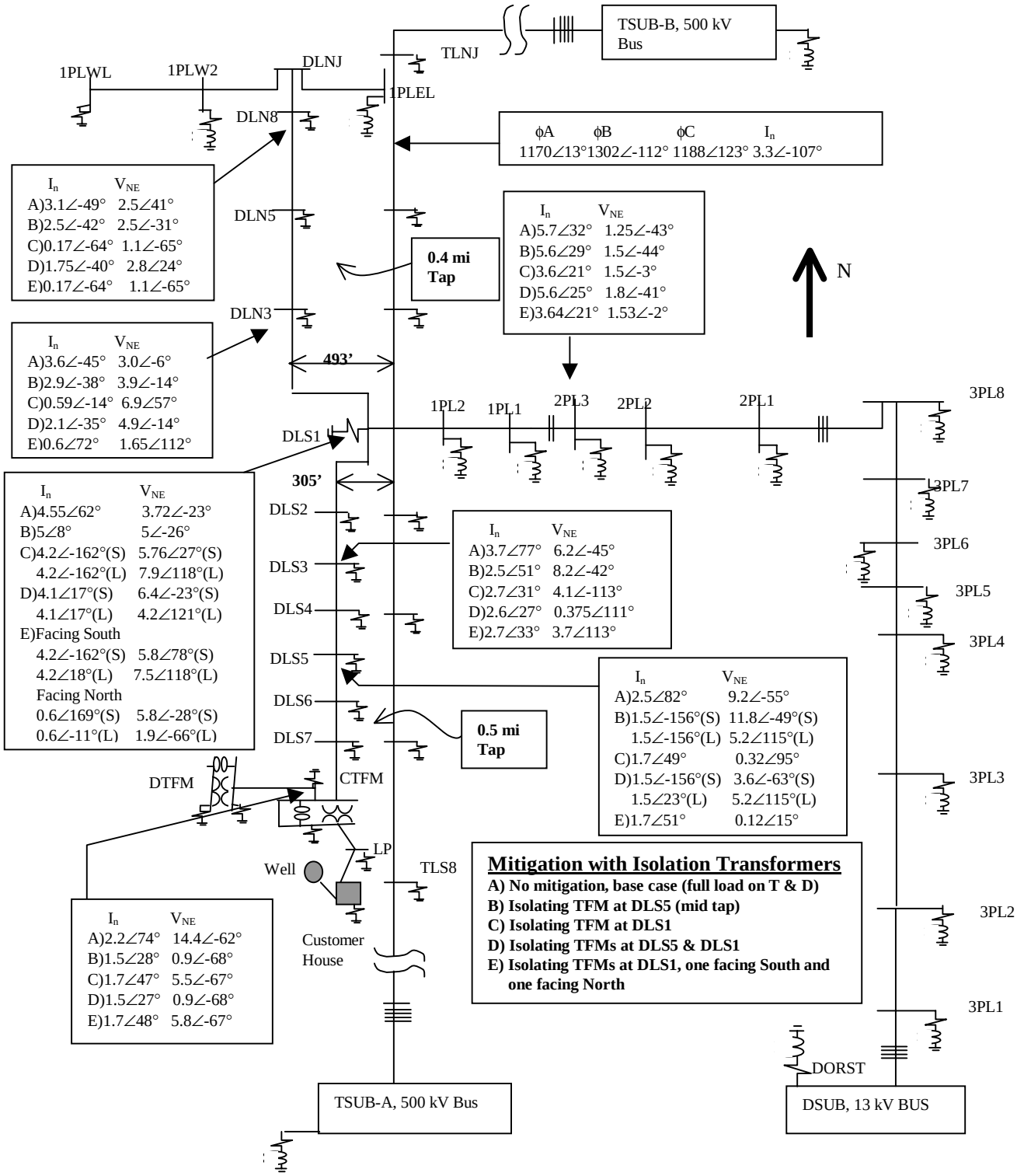

Figure 2: Distribution System Neutral Currents and N-E Voltages –
Effectiveness of Isolation Transformers in Reducing Stray Voltages along the Primary

VI. Conclusions

There are several conclusions that resulted from the analysis of induced stray voltages and mitigation means performed in this project. The following is a summary of these conclusions:

1) Compared to stray voltages resulting from an unbalanced load in the neutral, stray voltages due to induction can be significantly higher. In such a case, many of the traditional mitigation means (balanced load on three phase circuit, lowering ground resistance, increasing neutral conductor size, etc.) will not be effective.
2) The induced stray voltage problem may exist at several houses along the parallel section of the distribution line. Installing neutral isolators at these houses will solve individual stray voltage problems but will significantly increase N-E voltages at unprotected houses.
3) Installation of one or more isolation transformers along the parallel section breaks up large loops formed between the phase conductors, neutral conductor and ground into smaller loops. This, in turn, reduces the N-E voltages along the parallel section.
4) To insure the maximum effectiveness, cable and telephone grounding circuits must be isolated across the isolation transformers.

References

1) William Dick, David Winter, *Computations, Measurement and Mitigation of Neutral-to-Earth Potentials on Electrical Distribution Systems*, IEEE Transaction on Power Delivery, Vol. PWRD-2, No.2, April 1987.

2) James Donald, Claude M. Hertz, Ivan Winsett, *Results of Initial Field Installations of Magnetic Saturation Blockers for Minimization of Stray Voltage on Dairy Farms*, American Society of Agricultural Engineers, Paper No. 156-170, February 1984.

3) C. F. Dalziel, W. R. Lee, *Electric Shock Hazard*, IEEE Spectrum, Vol. 6, No.2, February 1969.

4) EPRI TR-113566, *Identifying, Diagnosing, and Resolving Residential Shocking Incidents*, Final Report, September 1999.

5) EPRI TR-106661-V1, *Distribution Grounding – Volume 1: Handbook*, Project 3066-01, Final Report, August 1996.

6) USDA Agriculture Handbook 696, *Effects of Electrical Voltage/Current on Farm Animals (How to Detect and Remedy Problems)*, December 1991.

Biography

Shashi Patel (Senior Member) was born in the Fiji Islands and grew up in India. He received a BS (EE) degree from India and MS (EE) degree from the Georgia Institute of Technology in 1976. He worked for a state owned utility company in India from 1965 to 1967 and started his career in the U.S.A. with Bonneville Power Administration, Portland, Oregon in 1969. Georgia Power Company employed him in 1970. Shashi retired from Georgia Power Company in 1995. Since that time, he has worked as a Senior Research Engineer at NEETRAC, a Center of Georgia Tech. Throughout his professional career, he has been involved in special projects covering a wide variety of areas, including power system studies, lightning and fault vulnerability investigations, high voltage testing, power system grounding, stray voltage investigations and underground corrosion.

Frank C. Lambert (Senior Member) received BEE and MSEE degrees from the Georgia Institute of Technology in 1973 and 1976, respectively. Before joining NEETRAC, Mr. Lambert was employed for twenty-two years at Georgia Power Company where his responsibilities included research, distribution automation, network underground, distribution and transmission system design, construction, operation, maintenance, and evaluation. He is currently Program Manager for Electrical Systems at NEETRAC, a Center of Georgia Tech, where his responsibilities include research and development projects related to power quality, grounding, power electronics, distributed generation, power systems analysis, and high voltage and high current testing.

National Electric Energy Testing, Research & Applications Center

NETRAC

A Research Center of the Georgia Institute of Technology

Induced Stray Voltages from Transmission Lines

Shashi Patel
Frank Lambert

Introduction

- Conventional stray voltage sources include unbalanced loads, neutral impedances, and high earth voltage gradients.
- Non-conventional sources include triplen harmonic neutral currents and induction from nearby transmission lines.

Induced Stray Voltages - Parameters

- Currents in transmission lines
- Proximity to distribution line
- Length of parallel section
- Additive phase angle between induced and load currents in the grounded neutral system
- Soil resistivity

Concern

- Stray voltage on a single phase tap line (7.2 kV) caused by a 500 kV transmission line
- Parallel section – Approximately 1 mile
- Average Distribution Pole Spacing – Approximately 350’
- Approximately 14 volts at the faucet of a customer at the end of the tap line

Project Scope

- NEETRAC and prior measurements
- Identification of various sources
- Computer modeling and validation with the measured data
- Performing studies to evaluate effectiveness of various stray voltage mitigation methods

Measurements by NEETRAC

- First set of measurements involved identifying house wiring, secondary neutral and buried 120/240 volt service related sources, if any. None was found.
- Second set of measurements included primary profiling from the substation to the customer – phase/neutral currents, NEVs and pole ground resistances

Prior Measurements

- Prior to NEETRAC's involvement, the utility company measured stray voltages at the customer's faucet both with and without energizing the transmission line.
- The measurements indicated that the transmission line contributed approximately 73% of the total stray voltage. The remainder was produced by the load current.

Computer Modeling

- Modeled the subject feeder from the substation to the customer including the parallel transmission line.
- Validated the model by comparing the results with the measured data.
- Identified the sources by simulating various operating conditions.

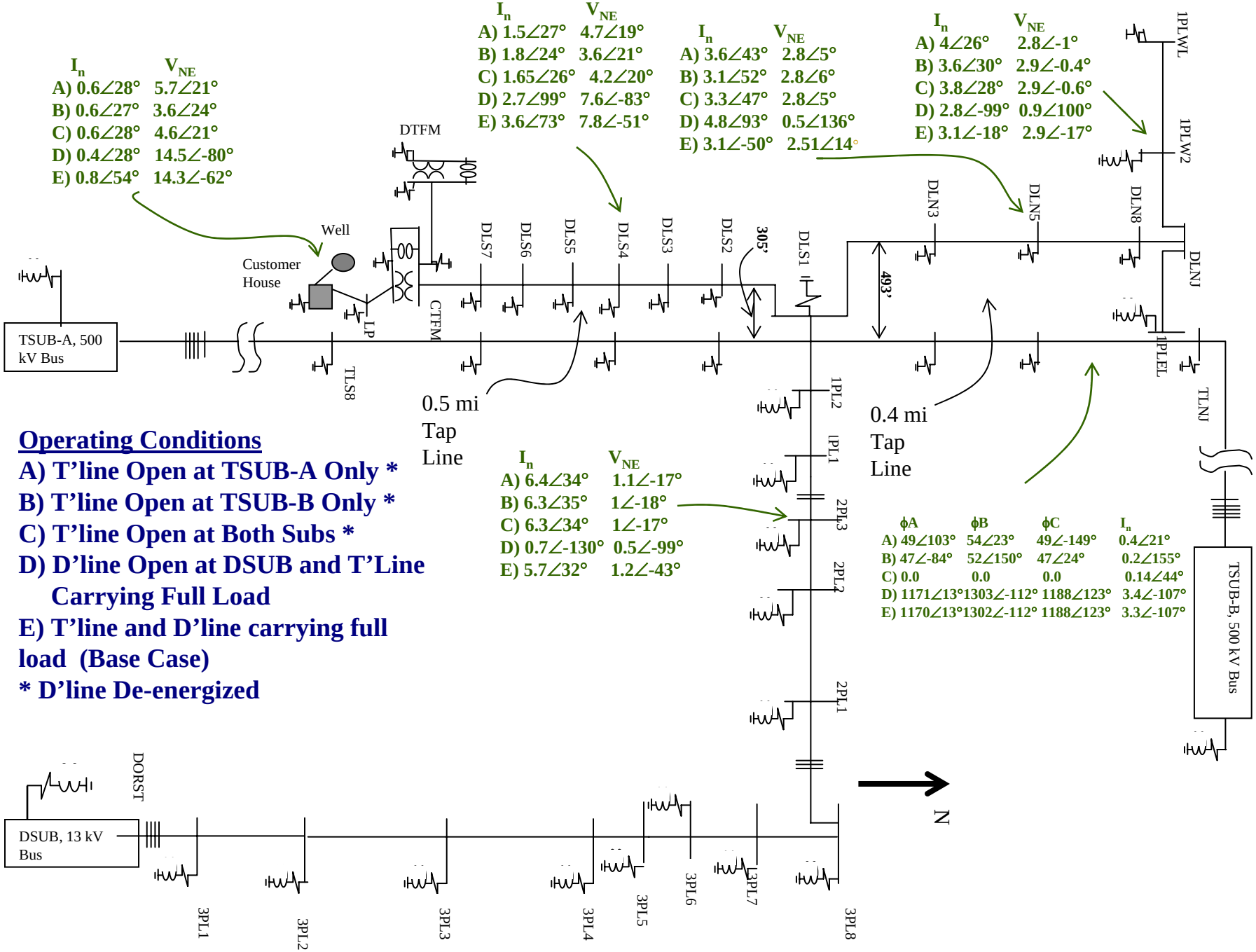

	I_n	V_{NE}
A)	0.6∠28°	5.7∠21°
B)	0.6∠27°	3.6∠24°
C)	0.6∠28°	4.6∠21°
D)	0.4∠28°	14.5∠-80°
E)	0.8∠54°	14.3∠-62°

	I_n	V_{NE}
A)	1.5∠27°	4.7∠19°
B)	1.8∠24°	3.6∠21°
C)	1.65∠26°	4.2∠20°
D)	2.7∠99°	7.6∠-83°
E)	3.6∠73°	7.8∠-51°

	I_n	V_{NE}
A)	3.6∠43°	2.8∠5°
B)	3.1∠52°	2.8∠6°
C)	3.3∠47°	2.8∠5°
D)	4.8∠93°	0.5∠136°
E)	3.1∠-50°	2.51∠14°

	I_n	V_{NE}
A)	4∠26°	2.8∠-1°
B)	3.6∠30°	2.9∠-0.4°
C)	3.8∠28°	2.9∠-0.6°
D)	2.8∠-99°	0.9∠100°
E)	3.1∠-18°	2.9∠-17°

	I_n	V_{NE}
A)	6.4∠34°	1.1∠-17°
B)	6.3∠35°	1∠-18°
C)	6.3∠34°	1∠-17°
D)	0.7∠-130°	0.5∠-99°
E)	5.7∠32°	1.2∠-43°

	ϕA	ϕB	ϕC	I_n
A)	49∠103°	54∠23°	49∠-149°	0.4∠21°
B)	47∠-84°	52∠150°	47∠24°	0.2∠155°
C)	0.0	0.0	0.0	0.14∠44°
D)	1171∠13°	1303∠-112°	1188∠123°	3.4∠-107°
E)	1170∠13°	1302∠-112°	1188∠123°	3.3∠-107°

Operating Conditions

A) T'line Open at TSUB-A Only *

B) T'line Open at TSUB-B Only *

C) T'line Open at Both Subs *

D) D'line Open at DSUB and T'Line Carrying Full Load

E) T'line and D'line carrying full load (Base Case)

*** D'line De-energized**

Evaluation of Mitigation Methods

Install neutral isolators

- **Initially, blocker ratings will be exceeded during high loading conditions.**
- **Replaced with 3 kV surge arrester with reduction in stray voltage from 14.3 volts to 0.01 volts.**
- **The primary NEV increased from 14.3 volts to 15.7 volts.**

Evaluation of Mitigation Methods

Move the tap line away

- The tap line would have to be relocated approximately 2,500' from the transmission line to reduce the stray voltage by 40%. This result is partly due to extremely high soil resistivity in the area.
- Besides the cost, this solution was impractical for existing customers.

Evaluation of Mitigation Methods

Install 5 Ohms ground well at each pole

- **Study showed that the stray voltages can be reduced by 40%.**
- **Drilling a ground well at eight locations is expensive.**
- **There is no guarantee that the resistance will be reduced to 5 Ohms.**

Evaluation of Mitigation Methods

Convert the tap to a three phase line and balance the load.

- **The NEV at the customer's transformer pole increased from 14.3 volts to 16.3 volts.**

Evaluation of Mitigation Methods

Install isolation transformers on the tap line

- Breaks the length of the parallel section
- Effective solution for the entire tap
- Cable TV or telephone shields across the isolation transformers must be isolated to increase mitigation effectiveness.
- Proper fuse coordination is required.

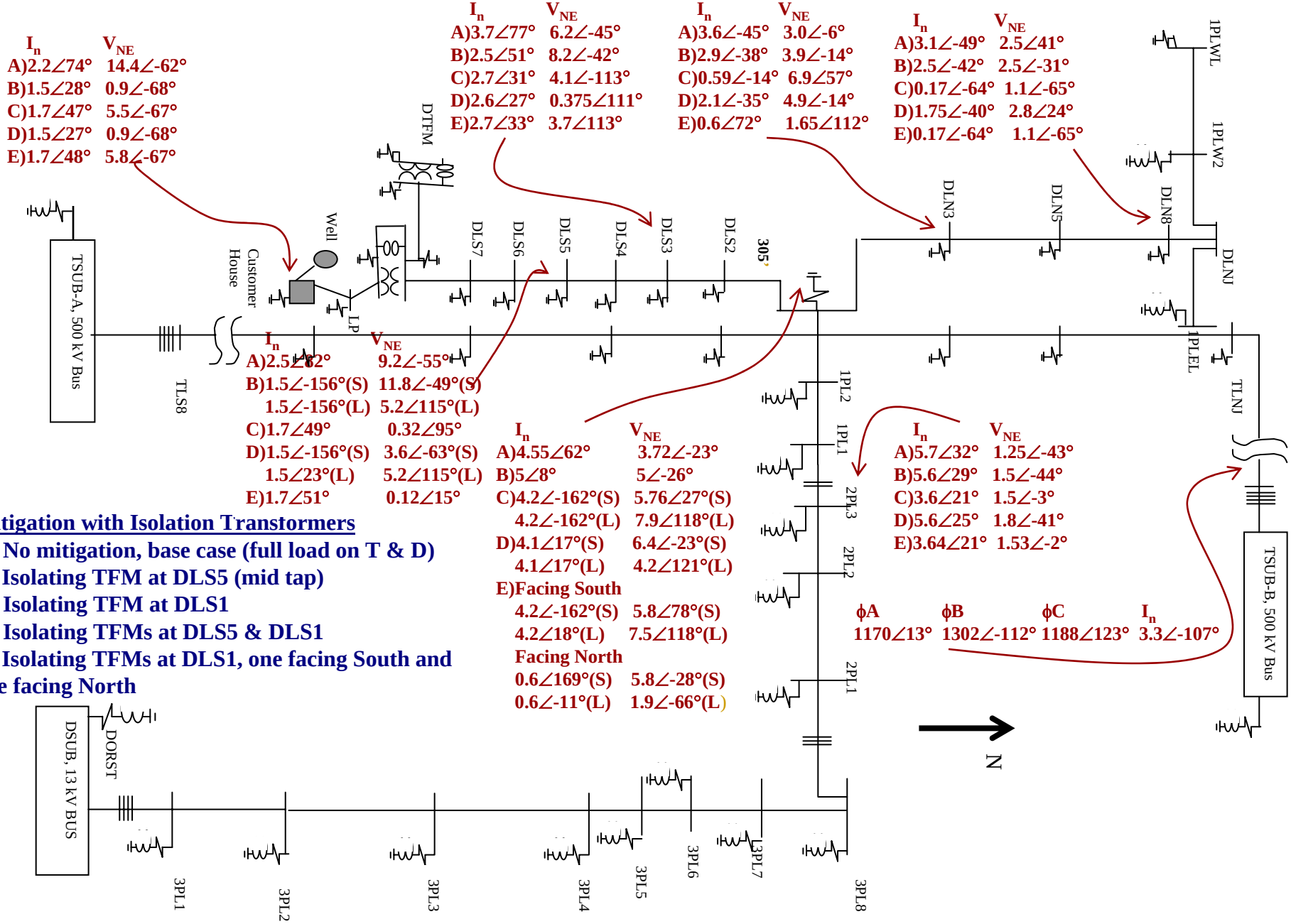

	I_n	V_{NE}
A)	2.2∠74°	14.4∠-62°
B)	1.5∠28°	0.9∠-68°
C)	1.7∠47°	5.5∠-67°
D)	1.5∠27°	0.9∠-68°
E)	1.7∠48°	5.8∠-67°

	I_n	V_{NE}
A)	3.7∠77°	6.2∠-45°
B)	2.5∠51°	8.2∠-42°
C)	2.7∠31°	4.1∠-113°
D)	2.6∠27°	0.375∠111°
E)	2.7∠33°	3.7∠113°

	I_n	V_{NE}
A)	3.6∠-45°	3.0∠-6°
B)	2.9∠-38°	3.9∠-14°
C)	0.59∠-14°	6.9∠57°
D)	2.1∠-35°	4.9∠-14°
E)	0.6∠72°	1.65∠112°

	I_n	V_{NE}
A)	3.1∠-49°	2.5∠41°
B)	2.5∠-42°	2.5∠-31°
C)	0.17∠-64°	1.1∠-65°
D)	1.75∠-40°	2.8∠24°
E)	0.17∠-64°	1.1∠-65°

	I_n	V_{NE}
A)	2.5∠62°	9.2∠-55°
B)	1.5∠-156°(S)	11.8∠-49°(S)
	1.5∠-156°(L)	5.2∠115°(L)
C)	1.7∠49°	0.32∠95°
D)	1.5∠-156°(S)	3.6∠-63°(S)
	1.5∠23°(L)	5.2∠115°(L)
E)	1.7∠51°	0.12∠15°

	I_n	V_{NE}
A)	4.55∠62°	3.72∠-23°
B)	5∠8°	5∠-26°
C)	4.2∠-162°(S)	5.76∠27°(S)
	4.2∠-162°(L)	7.9∠118°(L)
D)	4.1∠17°(S)	6.4∠-23°(S)
	4.1∠17°(L)	4.2∠121°(L)
E)	Facing South	
	4.2∠-162°(S)	5.8∠78°(S)
	4.2∠18°(L)	7.5∠118°(L)
	Facing North	
	0.6∠169°(S)	5.8∠-28°(S)
	0.6∠-11°(L)	1.9∠-66°(L)

	I_n	V_{NE}
A)	5.7∠32°	1.25∠-43°
B)	5.6∠29°	1.5∠-44°
C)	3.6∠21°	1.5∠-3°
D)	5.6∠25°	1.8∠-41°
E)	3.64∠21°	1.53∠-2°

ϕA	ϕB	ϕC	I_n
1170∠13°	1302∠-112°	1188∠123°	3.3∠-107°

Mitigation with Isolation Transformers

A) No mitigation, base case (full load on T & D)
B) Isolating TFM at DLS5 (mid tap)
C) Isolating TFM at DLS1
D) Isolating TFMs at DLS5 & DLS1
E) Isolating TFMs at DLS1, one facing South and one facing North

Conclusions

- **Stray voltages due to induction can be significantly higher compared to those due to load currents.**
- **Stray voltages due to induction are typically spread along the parallel section serving several customers.**
- **Most of the traditional mitigation means will not be effective.**

Conclusions

- **Installation of one or more isolation transformers along the parallel section is an effective solution for the customers served by the tap.**
- **For effective mitigation, Cable TV and telephone shields must be isolated across the isolation transformers.**

Mailing Address
P.O. Box 7985
Boise, Idaho 83707

Boise Office
Golden Eagle Building
1101 W. River St., Ste. 110
Boise, Idaho 83702
Tel. (208) 629-7447
Fax (208) 629-7559

Challis Office
1301 E. Main Ave.
P.O. Box 36
Challis, Idaho 83226
Tel. (208) 879-4488
Fax (208) 879-4248

Twin Falls Office
161 Fifth Avenue South
Twin Falls, Idaho 83301

SAWTOOTH LAW
OFFICES, PLLC

David P. Claiborne
david@sawtoothlaw.com

S. Bryce Farris
bryce@sawtoothlaw.com

Evan T. Roth
evan@sawtoothlaw.com

Daniel V. Steenson
dan@sawtoothlaw.com

James R. Bennetts, of counsel
jim@sawtoothlaw.com

Katie Kelly, legal assistant
katie@sawtoothlaw.com

Melodie Baker, legal assistant
mel@sawtoothlaw.com

Friday, June 28, 2013

Bureau of Land Management
Gateway West Project
P.O. Box 20879
Cheyenne, WY 82003
Via U.S. Mail
and Via E-Mail: Gateway_West_WYMail@blm.gov

RE: Final Environmental Impact Statement (April 2013)
Gateway West Transmission Line Project
Comments of Idaho Dairymen's Association

Dear Sir or Madam,

This office represents the Idaho Dairymen's Association, Inc. (herein "IDA"). Please accept this letter, and its attachments, as comments on behalf of IDA relative to the *Gateway West Transmission Line Project Final Environmental Impact Statement*, published April 26, 2013 (herein "FEIS"). IDA believes there are material errors in the FEIS analysis of effects of the proposal in relation to the animal environments related to agriculture (in particular – the dairy industry), and further that other reasonable alternatives could have been selected to avoid those significant impacts. These concerns are expressed in detail below.

Idaho's Dairy Industry

IDA was formed on July 5, 1944 by Idaho's dairy industry leaders. The purpose of IDA is to develop and sustain an economically viable Idaho dairy industry. Initially it was composed of and funded by dairy processors and producers. Today, the IDA falls under the umbrella of the United Dairymen of Idaho (UDI), which was formed in 1980 as a single entity that contains two separate organizations – IDA and the Idaho Dairy Products Commission (IDPC). Each organization serves a different purpose under the auspices of the UDI – IDA deals with industry and government relations projects, while IDPC focuses on promotion and marketing projects. Every dairy producer in the State of Idaho is a member of IDA, and the comments submitted herein are made on their behalf.

In 2003, the Idaho Dairy Environmental Action League (IDEAL) was formed, followed by the creation of the IDEAL Foundation in 2008. The IDA teamed with the IDEAL and the IDEAL Foundation to help the Idaho dairy industry and Idaho communities realize the many social and economic benefits of successful livestock operations, while working to protect and enhance important air, water and soil resources. The IDA works tirelessly at the local, state, regional and federal levels to protect and promote the legislative, regulatory and legal interests of its members. Through cooperation with IDEAL, a legal action and defense fund is now established to promote and defend the interests of the Idaho dairy industry in administrative and legal processes that may impact the industry.

Idaho's dairy industry provides significant resources to support research and promotion of dairy products needed to stabilize and sustain Idaho's dairy industry. The significant resources provided by Idaho dairy farmers helps drive demand for Idaho produced dairy products, which in turn contributes to the financial stability of rural communities and benefits the state and regional economies by dairy farmers continued investment. In 2011, on-farm cash receipts from milk produced on Idaho farms amounted to $2.446 billion dollars, ranking it as the largest single sector in Idaho's agriculture industry. It is estimated that the dairy industry of Idaho employs more than 22,730 individuals in the production, processing, transportation, and distribution of its milk and milk products. Allied industries employ an additional 13,470 workers (e.g., hay growers, corn silage growers, custom operators, dairy equipment manufacturers, feed companies, nutritionists & veterinarians). A significant economic impact for Idaho is realized through personal property tax, income tax, sales tax and retail sales generated from income derived from the dairy industry. Idaho is the 2nd largest milk producing state in the twelve western U.S. states and ranks 3rd among all states. As of December 31, 2011, Idaho had 577 dairy farm operations, which produced 13.223 billion pounds of milk (equivalent to 1.537 billion gallons) from 554,139 cows.

The Gateway West Transmission Line Project

The Gateway West Transmission Line Project (herein "Project") is jointly proposed by Idaho Power and Rocky Mountain Power. The companies plan to construct and operate 230 and 500 kilovolt (kV) transmission lines from the Windstar Substation near Glenrock, Wyoming to the Hemingway Substation near Melba, Idaho. The Project is composed of 10 transmission line segments with a total length of approximately 1,000 miles across southern Wyoming and southern Idaho.

The Project would begin at the Windstar Substation in Glenrock, Wyoming and would follow or parallel an existing 230-kV line proposed for reconstruction to the proposed Aeolus Substation near Medicine Bow, Wyoming. It would then proceed as a single-circuit 500-kV line from Aeolus to the Populus Substation near Downey, Idaho. A 345-kV line would connect the Anticline Substation with the Jim Bridger Power Plant. From Populus to the Hemingway Substation southwest of Boise, Idaho, the Project would consist of two single-circuit 500-kV roughly parallel paths—Segments 5, 6, and 8 would travel on a more northerly route toward the Hemingway Substation through the Borah and Midpoint Substations, while Segments 7 and 9 would travel a more southerly route through the proposed Cedar Hill Substation near Murtaugh, Idaho, to the Hemingway Substation. Segment 10 would provide an interconnection

between the Cedar Hill and Midpoint Substations and also provide an interconnection between the more northerly and more southerly routes. The Proponents have proposed this split because of the need to serve loads along the way and also to increase reliability.

The transmission line segments would cross federal, state, and private lands. The ROW width requested for the transmission line ranges from 125 feet for the single-circuit 230kV segment to 250 feet. Approximately 49 percent of the land to be crossed is federal, 7 percent state, and nearly 44 percent is privately owned. The Proponents would negotiate details regarding needed land acquisition across privately owned lands, either in fee or as an easement, for the transmission line and associated facilities (substations, etc.) with each landowner. In exchange for the right to operate the transmission line and facilities, the Proponents would compensate the landowner for the use of the land. Although BLM does not have the legal authority to enforce stipulations on private lands, BLM has recognized and agrees it has the obligation to recommend stipulations to reduce impacts as part of the NEPA process. FEIS, at 1-36. As part of the NEPA analysis, BLM must analyze the potential environmental impacts of the Project, whether those effects will be realized on public or private lands. See, e.g., Citizens for a Better Henderson v. BLM, 768 F.2d 1051 (10th Cir. 1985) (holding that, in an EIS for a proposed power transmission line, BLM was required to determine hazards posed by the electrical line to private citizens residing on private land adjacent to a federal right-of-way corridor).

As part of the analysis of the Project, significant issues for analysis have been identified. As is relevant to the comments provided herein, the following significant issues have been identified –

Land Use and Recreation

- How would the project affect concentrated animal feeding operations (CAFO), which include dairy producers? FEIS, at 1-49.
- How would the project affect current agricultural systems, including pivot irrigation and advanced positioning systems used in farm equipment? FEIS, at 1-49.

Agriculture

- How much agricultural land would be impacted, and what would the effects be? FEIS, at 1-50.
- What would be the impacts to agricultural production including equipment operation and aerial spraying? FEIS, at 1-50.
- Would there be a disruption to dairy operations and other types of CAFOs? FEIS, at 1-50.
- Would the transmission line cause electronic interference with agricultural equipment? FEIS, at 1-50.

Electrical Environment

- Would electric and magnetic fields (EMF) associated with transmission lines cause health effects? FEIS, at 1-51.
- Would stray voltage be a concern in the context of animal care where unwanted voltage on feeders, watering stations, or equipment such as milking machines, can lead to reduced food or water intake? FEIS, at 1-51.[1]

[1] In the dairy environment, unwanted voltage may also be experienced at headlocks, loop stalls and fencing.

All of the above issues describe potential impacts to IDA members' dairy operations. For example, one IDA member, Curtis DeVries, is a dairy producer with facilities located near Kuna Cave Road, Kuna, Idaho. This area of operation is indicated on **Attachment 1**, and is located within the area impacted by the preferred alternative. As is readily apparent, the transmission line would cut through the middle of two pivot-irrigated fields, and comes within less than one mile of milking parlors. Had BLM instead selected the Project proponent's proposed route, several miles to the south, any impacts to dairy producers would have been avoided. See **Attachment 2**.

Another IDA Member, Aardema Dairy, is a dairy producer with facilities located just west of U.S. Highway 93 and the E 700 N Road, near Jerome, Idaho. This area of operation is indicated on **Attachment 3**, and is located within the area impacted by the preferred alternative. Another dairy, along River Ranch Road south of Gooding, is also adjacent to the preferred alternative. The transmission line in these areas will interfere with several pivot irrigated fields, and impact milking parlors and feedlots associated with the dairy that are located within the impact zone. Had BLM instead selected the Project proponent's proposed alternative route, just to the south, several other dairy operations would be located within the impact zone. These include operations along the E 2400 S Road near Hagerman, Idaho, and along the S 1300 E Road, also near Hagerman. See **Attachment 4**. For these reasons, the IDA suggests consideration of two other reasonable alternatives, one at the Midpoint Substation, proceeding north therefrom and bypassing the nearby dairy operations to connect back to the preferred alternative, and the other bypassing River Ranch Road south of Gooding to avoid that dairy operation. See **Attachment 5**.

Yet another IDA member, Bettencourt Dairies, is a dairy producer with facilities located along the 800 S Road south of Kimberly, Idaho. This operation is indicated on **Attachment 6**, and is located within the area impacted by the preferred alternative. As is readily apparent, the transmission line would come within less than one mile of milking parlors. Had BLM instead selected the Project proponent's proposed alternative route, incoming from the south, any impacts to dairy producers would have been avoided. See **Attachment 7**.

There may be other affected dairy operators, and the concerns of IDA extend to all dairy operations potentially impacted by the Project. After the FEIS was published, the detailed mapping of CAFOs conducted by Tetra Tech was requested of the BLM, but it has yet to be received.[2] After analysis of that data, once provided, the IDA will be better positioned to identify all impacted dairies, and reserves the right to supplement these comments once the BLM provides the previously requested information.

[2] This office requested that information by email to Gateway_West_WYMail@blm.gov on May 9, 2013. The email requested the Tetra Tech 2010a report and mapping referenced at Ch. 3, Sec. 18, pg. 12 of the FEIS. No response to that communication has been provided.

Stray Voltage and its Effects

The primary concern of the IDA with respect to location of the transmission line is stray voltage and its effects on the domestic animal environment. To avoid these effects, the transmission line should be located away from dairy operations, milking parlors and dairy feedlots.

Stray voltage is basically a form of neutral-to-earth voltage to a specific location. See Abed, Salem & Burke, *Evaluation of Induced Stray Voltages from Transmission Lines using EMTP*, at 1 (copy at **Attachment 8**). Most concerns with stray voltage in the dairy industry occur due to induction. *Id.* Animals are sensitive to stray voltage and suffer effects therefrom even when humans may not notice the stray voltage. *Id.* At 1 volt of contact, a cow experiences negative effects such as decreased milk production, reluctance to eat or drink, and other erratic behavior are noticeable. *Id.* In the Abed, Salem & Burke study, a 13.8 kV transmission line, with three-phase multi-grounding consistent with the IEEE National Electric Safety Code, was analyzed for stray voltage effects. *Id.* at 2. The study found that such a transmission line, through almost any scenario, induced stray voltage of an amount significant enough to effect animal behavior. *Id.* at 5. Recall that the Project will involve 230 kV and 500 kV transmission lines, well in excess of the study model, making it a near certainty that stray voltage induction will be significant in the dairy environment.

Exacerbating the stray voltage effects of transmission lines is the effect of nearby distribution lines. Studies have confirmed that transmission lines will cause parallel distribution lines within one mile to induce stray voltage. See Patel & Lambert, *Induced Stray Voltages from Transmission Lines* (copy at **Attachment 9** and **Attachment 10**). In the referenced study, the experts examined the interplay between a 500 kV transmission line and a 13kV distribution feeder line. *Id.* at 1. They found induced stray voltage as high as 18 volts along a distribution feeder parallel to the transmission line – an amount of voltage clearly enough to effect animal behavior. *Id.* Of the stray voltage, 73% was due to the load current in the 500 kV transmission line, while the remaining 27% was due to the distribution feeder. *Id.* The experts were able to rule out any other contributors to stray voltage, such as corroded neutrals or other conditions on the farm property. *Id.* They then evaluated various means of mitigation. *Id.* at 2-5. It was determined that traditional means of mitigation, such as a balanced load on a three phase circuit, was not effective to eliminate the stray voltage. *Id.* at 6. Also, installing neutral isolators at areas with high stray voltage would cause an increase in stray voltage in other areas. *Id.* So, in essence, proper mitigation would require isolation transformers at nearly all distribution areas parallel to the transmission line, and cable and telephone grounding circuits would need to be isolated from the electric isolation transformers. *Id.* In most cases, this would require significant modifications to existing systems.

The FEIS acknowledges that dairy farms could be subjected to stray voltage once the Project goes live. FEIS, at 3.18-25. However, the FEIS incorrectly concludes that stray voltage effects on cows are due to "electrical equipment on the farm and local electrical wiring, not because of the operation of nearby transmission lines." *Id.* The actual scientific data, as detailed above and in the attachments, demonstrates that transmission lines carrying loads equivalent to the Project contribute 73% of the

stray voltage in areas where power is locally distributed within one mile of the transmission line, and which is experienced after isolating all on-farm contributors.

The FEIS also concludes that "most cows would need a current of 3 to 4 volts before behavioral changes could be noticed." FEIS, at 3.18-25. This is another error in the FEIS conclusions. Available science actually indicates cow behavior changes at as little as one volt of induced stray voltage. Moreover, the test case on a transmission line comparable to the Project found induced stray voltage as high as 18 volts, admittedly enough to effect dairy cow behavior under the FEIS conclusion. The 500 kV proposed transmission lines will undoubtedly induce stray voltage of a high enough amount to effect dairy cow behavior, and the FEIS fails to recognize this fact and analyze the alternatives in light of this information.

Later, the FEIS concludes that "transmission lines such as the one proposed are not normally associated with . . . stray voltage because the transmission line is a balanced, three-phase line." FEIS, at 3.21-12. This is yet another flaw in the FEIS. As detailed above, test cases on transmission lines as low as 13.8 kV, with three-phase balanced loads, have found induced stray voltage high enough to effect animal behavior.

The FEIS also concludes that the Project should not pose a concern to dairies in Idaho because the preferred route is not close enough to any dairies to cause an impact. This is simply untrue. As detailed above, at least two dairies are within the impact zone of the preferred route, and the available studies indicate that stray voltage with a negative effect on cow behavior will likely occur as a result. The FEIS fails to acknowledge this, and fails to accept other alternatives that could avoid such an impact.

The FEIS concludes that "Gateway West should not affect local distribution systems or create a change in the occurrence of stray voltage." FEIS, at 3.21-33. This is yet another fundamental flaw in the FEIS' conclusions regarding stray voltage. The scientific studies, detailed above and attached, show that a 500 kV transmission line will significantly effect induced stray voltage, will heighten the same, and will contribute as much as 73% of the resultant stray voltage.

Conclusion

The FEIS is significantly flawed with respect to its analysis of induced stray voltage and the effect thereof on dairy operations. The FEIS fails to acknowledge the effects the stray voltage will have on domestic animal behavior. The FEIS should have appropriately addressed these issues as explained above. In light thereof, with respect to Segment 8, from I-84/Boise Stage Stop to Hemingway Substation, the FEIS should have selected the Project proponent's proposed route. Also with respect to Segment 8, from the Midpoint Substation to north of Glenns Ferry, the FEIS should have selected, or at least considered, two different alternatives, as reflected on **Attachment 5**, so as to avoid dairy impacts. With respect to Segment 7, from Albion Valley Road to the Cedar Hill Substation, the FEIS should have selected the Project proponent's proposed alternative route. These selections would have completely avoided any dairy impacts. The IDA suggests that either: (1) any record of decision select the above alternatives with respect to the designated segments; or, alternatively, (2) that further study and analysis be conducted of

SAWTOOTH LAW
OFFICES, PLLC

the Project corridor, in light of the above stray voltage discussion, and a supplemental EIS be issued for further comment, analysis and discussion.

Thank you for the opportunity to comment. We trust that the above will be well-received and fully considered.

Very Truly Yours,

Daniel V. Steenson
David P. Claiborne

Encl.

cc: Idaho Dairymen's Association (w/ encl.)
Bonnie Butler, Office of the Governor (w/ encl.)
Celia R. Gould, Director, Idaho Dept. of Agriculture (w/ encl.)

SAWTOOTH LAW
OFFICES, PLLC

ATTACHMENT

1

101003

Stage Coach Rd
Big Foot Rd
45
Southside Rd
Kuna Cave Rd
W Deckman Rd
Cloverdale Rd
Eagle Rd
Gowen Rd
Pleasant Ave
Meridian
Google

SAWTOOTH LAW
OFFICES, PLLC

ATTACHMENT

2

Google

SAWTOOTH LAW
Offices, PLLC

ATTACHMENT

3

101003

SAWTOOTH LAW
OFFICES PLLC

ATTACHMENT

4

Malad Gorge State Park
Shoe String Rd
E 2300 S
E 2350 S
E 2900 S
E 2950 S
Hagerman Hwy
Wendell
84
46
Google

SAWTOOTH LAW
OFFICES, PLLC

ATTACHMENT

5

—— = Proposed Alternative for Consideration

—— = Proposed Alternative for Consideration

SAWTOOTH LAW
OFFICES, PLLC

ATTACHMENT

6

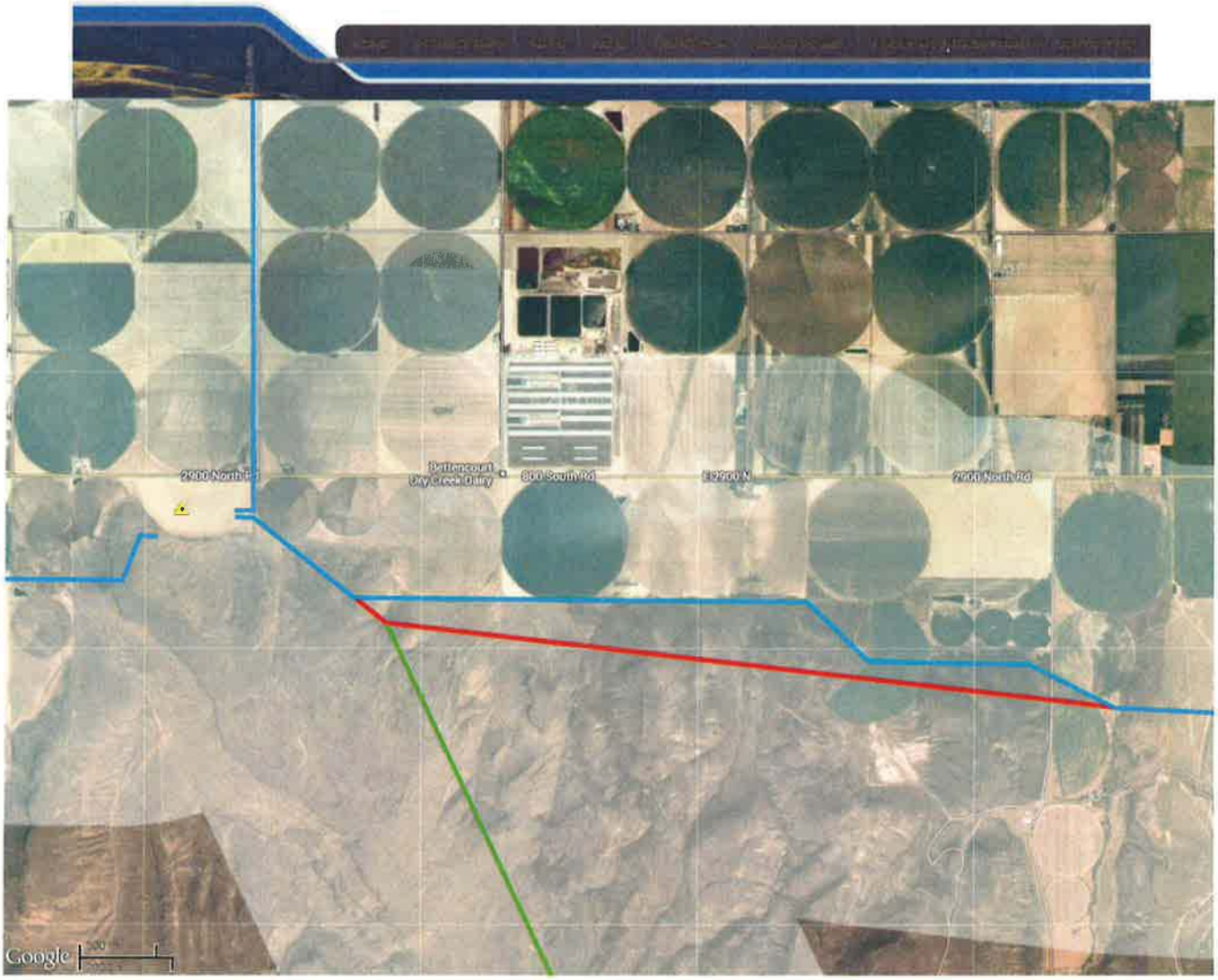
2900 North Rd
Bettencourt
Dry Creek Dairy
300 South Rd
E 2700 N
2700 North Rd
Google

SAWTOOTH LAW
OFFICES, PLLC

ATTACHMENT

7

Gooding
State Park
Jerome
Bohl
Twin Falls
Rupert
Burley
Chubbuck
Pocatello
American Falls
Massacre Rocks State Park
Malad City
Tremonton
Brigham City
Google

SAWTOOTH LAW
OFFICES, PLLC

ATTACHMENT

8

Evaluation of Induced Stray Voltages from Transmission Lines using EMTP

Nagy Abed, *Senior Member, IEEE*, Sasan Salem, *Member, IEEE*, and Jim Burke, *Fellow, IEEE*

Abstract-- **The purpose of this paper is to study the effect of transmission system parameters and operating conditions on generated stray voltage levels. . This includes the transmission line conductor configurations, line loading levels, grounding system parameters, the feeder configuration (radial or ring configuration) and unbalance loading. This enables a better way to understand how different electrical parameters impact the level of NEV and currents at points of interest during different utility operating conditions. Excessive stray voltages levels may have a negative effect on dairy farm cows and endanger personnel safety. EMTP was used to simulate the coupled electromagnetic-power circuit system. EMTP models of the poles and the line phase, neutral, and ground wire were built to represent the transmission line electromagnetic behavior and the stray voltage generation mechanism. The parameters of the proposed models were obtained from the technical literature. Different simulations were conducted by varying the system parameters and operating conditions. A discussion of these results is presented.**

Index Terms—Stray Voltage, Induction, Transmission Line, Earth, Earth Current, Ground, Step Potential, Touch Potential

I. Introduction

Stray voltage in power systems has been studied prior to the 1970's. Stray voltage is a special case of neutral-to-earth voltage (NEV); it differs from NEV because it is defined at a specific location [1]. Stray voltage in power systems has been studied prior to the 1970's. It was typically considered normal, with some issues arising from the dairy industry, pig farms owners, sensitive electronic loads and pool owner. In the case of transmission lines, however, stray voltage is normally the result of induction. Stray voltage has stirred significant public attention. The "danger" of stray voltage has been exaggerated in some articles in the press.

The reaction of animals to stray voltages varies with the amount of the voltage. Animals are more sensitive to small voltages than humans, and will react to voltages that humans cannot feel. The Wisconsin Public Service Commission defines a "level of concern" of 1 V for the cow contact voltage, which corresponds to 2 mA of current through a 500 Ω resistor [3]. The Symptoms reportedly attributed to significant levels of stray voltage include [1, 2,3]:

1. Decreased milk production of dairy cows
2. A change in the animal's behavior (e.g. Animals' reluctance to eat or drink from a feeder, erratic behavior, May not drink enough water etc)
3. Improper operation of sensitive electronic loads

Stray voltage at barns is normally measured across a 500-Ω resistor, which represents the typical resistance of a cow.

The effect of stray voltage on humans depends on their contact resistance and their body resistance (i.e. current). There are a number of references used in the industry that discuss the resistance of the human body. The body's internal resistance is about 300Ω. Resistance including the skin contact resistance is in the range of 500 to 5000 Ω [3, 8] but varies widely. Electrocution can occur for currents through the heart on the order of 60 to 100 mA; 250 mA through the heart is almost always fatal [3]. These levels of current interfere with the heart's internal electrical pacemaker and force the heart to stop beating properly. During this ventricular fibrillation, the heart muscle fibers contract erratically and unpredictably, leading quickly to death from lack of oxygen to the brain.

The following factors contribute to induced stray voltages on transmission lines:

1- Unbalanced currents in the transmission line conductors

2- Transmission line conductors configuration (pole configuration and untransposed lines)

3- Additive phase angles between the induced and load related currents in neutral system

4- Soil resistivity along the transmission line

Neutral-to-earth voltages cannot be studied using existing load-flow programs. To accurately model stray voltage, a more general steady-state circuit analysis program such as EMTP is needed. Accurate modeling involves modeling the neutral and the individual grounding electrodes [3].

This paper describes a case study involving induction related stray voltage concerns, simulation, and measurement, under different operating conditions.

II. System Modeling

This section deals with the modeling methodology utilized to simulate and measure the stray voltage. Figure 1 shows the

Nagy Abed, Sasan Salem , and Jim Burke are with Quanta Technology, ,Raleigh, NC, USA (nabed@quanta-technology.com, ssalem@quanta-technology.com, jburke@quanta-technology.com)

978-1-4244-6551-4/10/$26.00 ©2010 IEEE

schematic diagram of the 13.8 kV transmission test system used for the study.

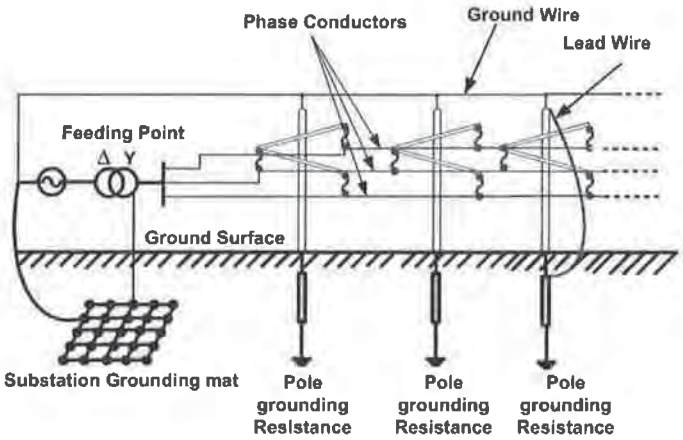

Fig. 1 Schematic Diagram of the Modeled Transmission Line System

The transmission line model utilized in the study is a distributed Constant Parameter (CP) model. The model is based on the Bergeron's traveling wave method [6]. In this model, the wave equation is solved to obtain the line operating characteristics (current, and voltage).

The transmission line parameters per unit length were obtained from geometrical and physical information (line dimensions (the distances between the conductors), height above ground, conductor and soil resistivity).

For multiphase system the wave equations are written in the matrix form:

$$\frac{d^2V}{dx^2} = Z'Y'V \tag{1}$$

$$\frac{d^2I}{dx^2} = Z'Y'I \tag{2}$$

Where:

$[Z'] = [R'] + s[L']$ Series Impedance per unit length

And $[Y'] = [G'] + s[C']$ Shunt Branch per unit length

The multiphase line is transformed into a decoupled set of modal circuits as shown in Figure 2.

With eigenvalue theory, it becomes possible to transform the above two coupled equations from phase quantities to modal decoupled quantities. The multiphase line is transformed into a decoupled set of modal circuits. The equations are then solved to obtain the transmission line terminal response.

Equations (1) and (2) are transformed into model domain

$$-\frac{d\hat{V}}{dx} = T_v^{-1} Z' T_i \hat{I} \tag{3}$$

$$-\frac{d\hat{I}}{dx} = T_i^{-1} Y' T_v \hat{V} \tag{4}$$

Where $V = T_v \hat{V}$, $I = T_i \hat{I}$ and $T_i = (T_v^t)^{-1}$

The completely decoupled equations (3) and (4) are then solved to obtain the transmission line terminal response.

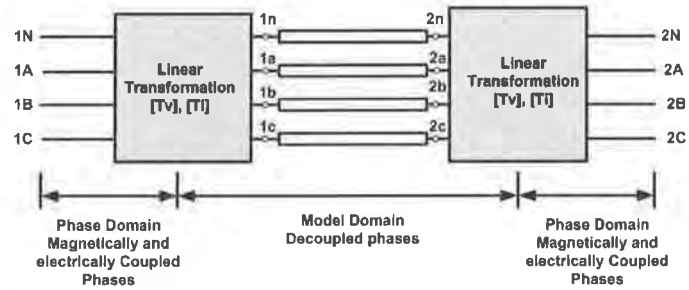

Fig. 2 The Distributed Constant Parameters Line Model

The neutral of the overhead line is often grounded at intervals along the line as required by IEEE National Electric Safety code [11]. Figure 3 illustrates two segments of three phase multigrounded line model (Carson's model).

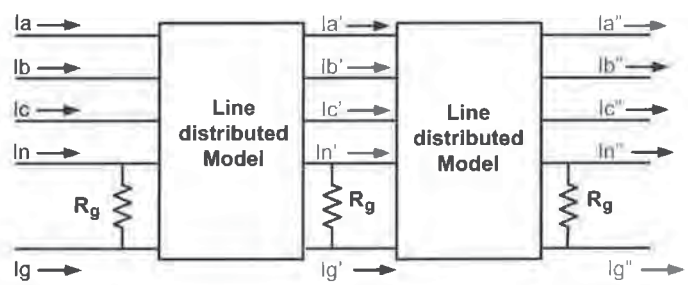

Fig. 3 Two segments of a multigrounded three phase line

In this study, a transmission system with 160 poles was modeled. The transmission line consists of untransposed three wires with a static wire. The transmission line is grounded every four poles. Appropriate data was obtained to model poles, lines, shield wires, ground rods, and the substation grounding.

Unbalanced currents on transmission lines, caused by unbalanced load and/or un-transposed lines induce a voltage on parallel lines including ground wires, communication lines, and other transmission or distribution wires. The study was conducted for balanced and unbalanced loading and with uniform pole configuration. The induced voltages are considered to be steady state and 60 Hz so; they manifest similar characteristics to "stray voltage".

III. Simulations and Results

A transmission system with 160 poles was modeled to determine the impact of various system parameters on the generated stray voltage level. For this purpose the following system parameters were studied:

- Equivalent of substation grounding mat resistance
- Line loading
- Pole ground rod resistance
- Line Span length
- Unbalanced line loading
- The transmission line boundary conditions (i.e. radial or dual supply)

a. Impact of Substation Grounding Resistance on the Generated Stray Voltage

The effect of substation grounding on the stray voltage

levels is first examined using five substation grounding resistance: 0.1, 0.25, 0.5, 0.75 and 1 Ω respectively. A series of cases were conducted in which the substation ground resistance was changed and stray voltage levels were recorded for both radial and dual supply feeder.

Figure 4 shows the generated stray voltage in volt that result from these cases for dual supply feeder. From the results, it can be seen that the change in the substation resistance from 0.1 ohms to 1.0 Ohm will increase the measured stray voltage levels significantly. It is of interest that there is a significant difference between 0.1Ω and 0.5Ω, but above 0.75Ω, changes in the substation grounding resistance have less effect on the generated stray voltage levels.

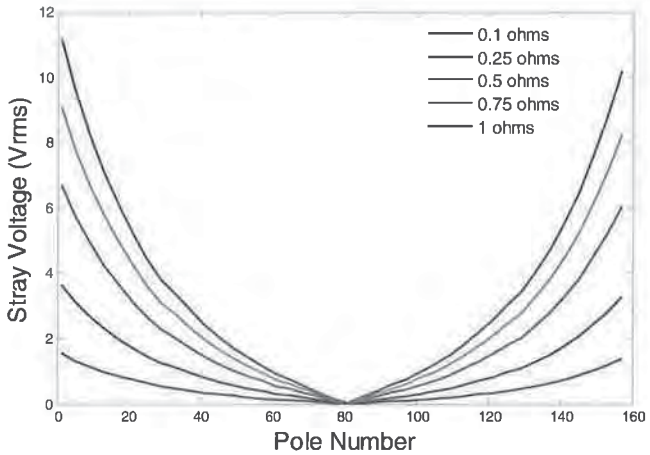

Fig. 4 Impact of Substation Grounding on SV level for dual supply feeder

Most substation grounds are generally assumed to be on the order of 1 ohm (or higher in distribution substations). The stray voltage rises particularly on the poles in the vicinity of the substation, which is consistent with the results of other papers on this topic.

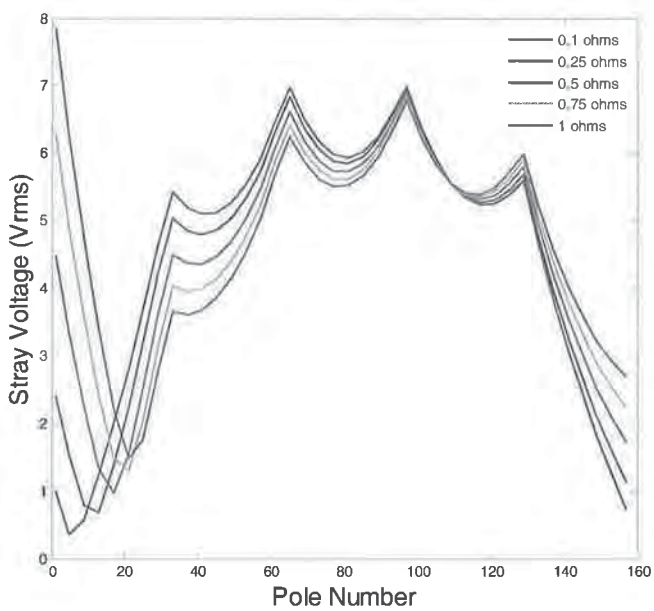

Fig. 5 Impact of Substation Grounding on SV level for radial feeder

Figure 5 shows the generated stray voltage for different substation grounding values for radial feeder. By increasing the substation resistance from 0.1 ohms to 1.0 Ohm the stray voltage will increase significantly at both terminal of the line while the values between the two terminals varies differently from the two way feed feeder case. The results show that there is a significant difference between 0.25Ω and 0.5Ω, but above 0.75Ω, changes in the substation grounding resistance have less effect on the generated stray voltage levels.

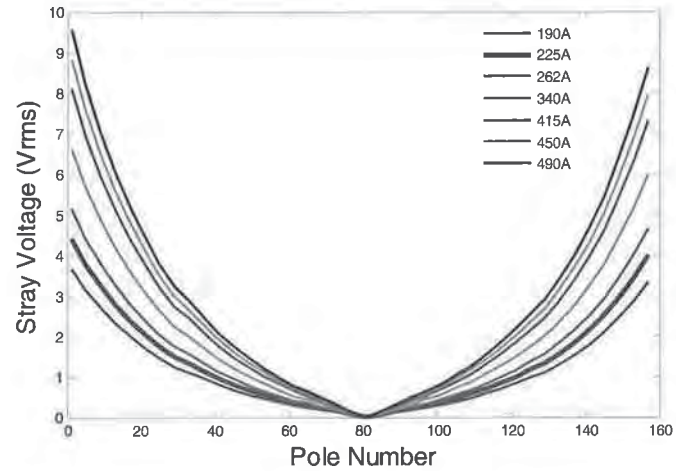

Fig. 6 Impact of Line loading on the Generated SV Level for dual supply feeder

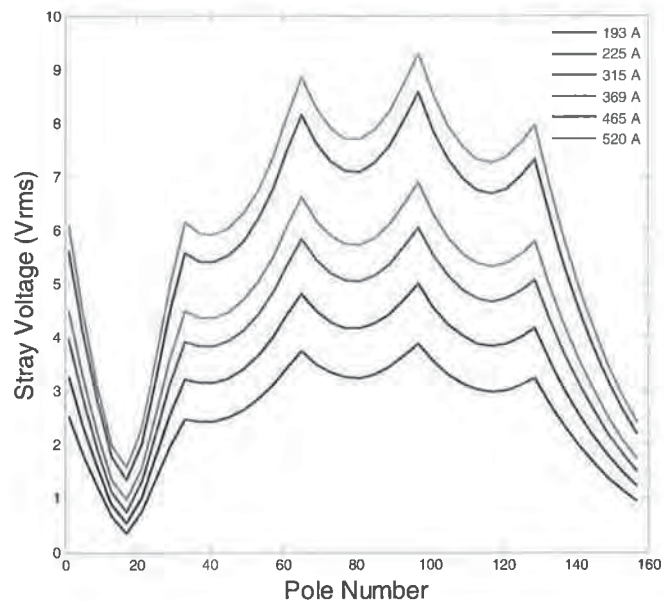

Fig. 7 Impact of Line loading on the Generated SV Level for radial feeder

b. Impact of Line Loading on the Generated Stray Voltage

To examine the effect of transmission line current loading on the generated stray voltage levels, different loading cases were simulated and the generated stray voltage levels were measured.

Figure 6 and 7 shows the stray voltage levels for various line currents for dual supply feeder and radial feeder respectively. As was expected, higher line currents induce higher voltages in the shield wire and the stray voltages will increase accordingly.

c. *Impact of Pole Grounding Resistance on the Generated Stray Voltage*

In this part of the study, the pole grounding resistance is varied between 5-200 ohms to study the relationship between the induced stray voltage levels and the pole grounding. These range represent typical high and low pole grounding resistance.

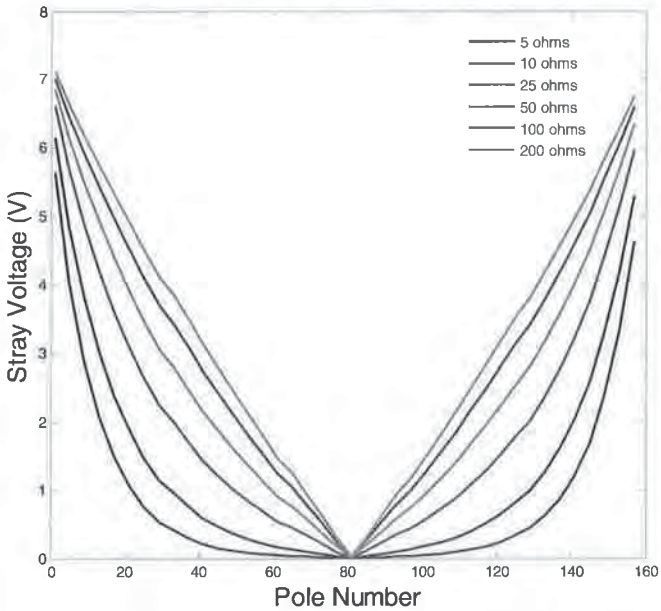

Fig. 8 Impact of Pole Grounding Resistance on the SV Level on dual supply feeder

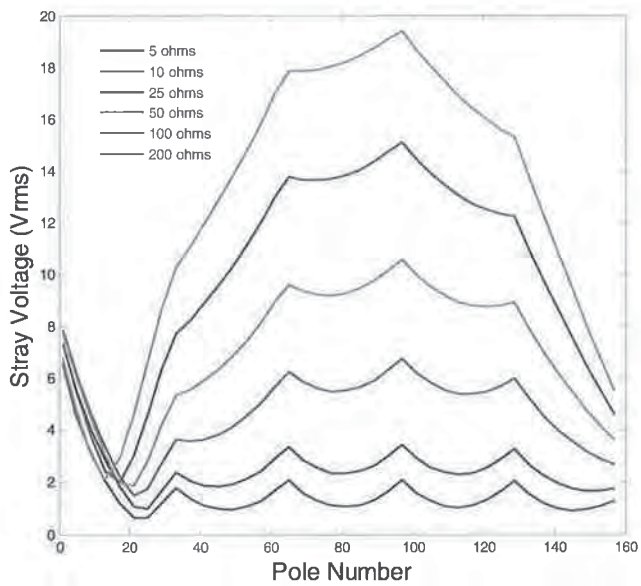

Fig. 9 Impact of Pole Grounding Resistance on the SV Level on radial feeder

The impact of pole ground rod resistance on stray voltage is shown in Figure 8 for dual supply feeder. The simulation results demonstrate that there is a significant difference between 5Ω, 10Ω and 25Ω, but above 50Ω, changes in the pole grounding resistance have less effect on the generated stray voltage levels. In many areas, it is very difficult to drive ground rods to attain values less than 50 ohms, so the impact of grounding, to reduce stray voltage, might be considered minimal for most transmission lines.

The impact of pole ground rod resistance on stray voltage is shown in Figure 9 for radial feeder. The simulation results demonstrate that there is a significant difference for pole grounding resistance values above 25Ω, but below 10Ω, changes in the pole grounding resistance have less effect on the generated stray voltage levels.

d. *Impact of Line Span on the generated Stray Voltage*

In order to evaluate the line span effect on the generated stray voltage, a series of simulations was conducted in which the line span was changed. The line span was changed between three values: 40, 50, and 60 meters respectively. Figure 10, and Figure 11 shows the impact of the line span length on the stray voltage for dual supply feeder and radial feeder respectively. The simulation results demonstrated the line span length has a little impact on the stray voltage level.

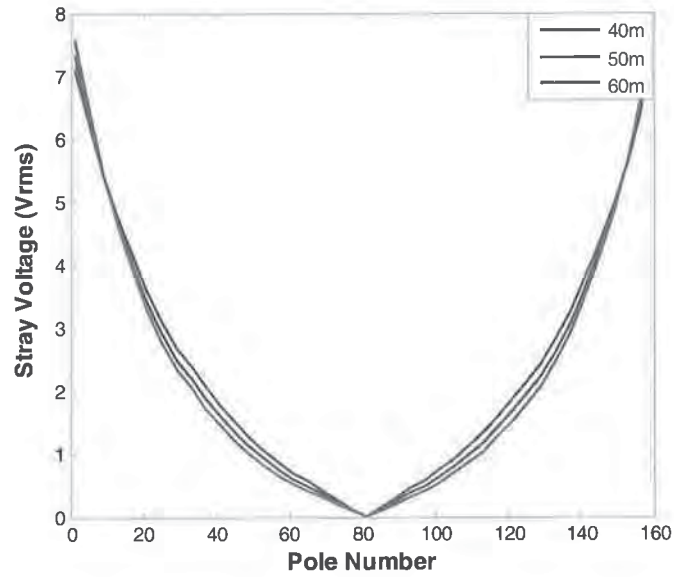

Fig. 10 Impact of Line Span on the SV Level on dual supply feeder

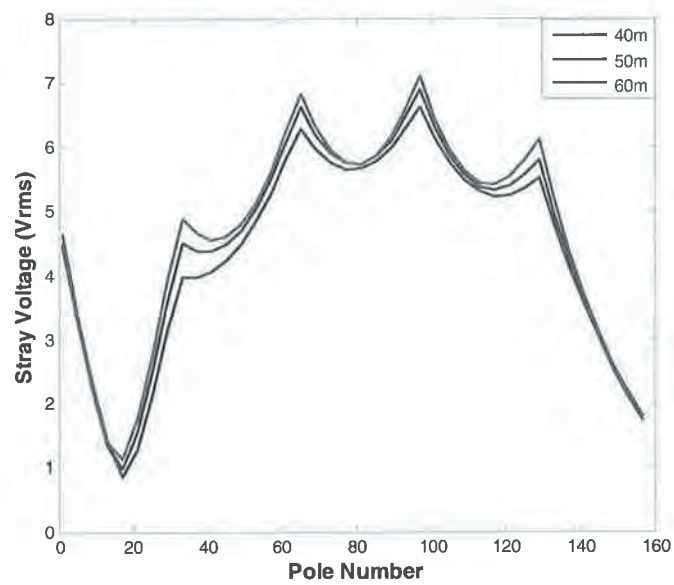

Fig. 11 Impact of Line Span on the SV Level on radial feeder

e. Impact of load unbalanced on the Stray Voltage

To evaluate the impact of unbalanced loading on the stray voltage the transmission line loading was changed to create currents unbalance one of the phases. The loading unbalance was varied between 2% to 20%.

Figure 12 shows the stray voltage levels results for different unbalance loading for dual supply feeder. The results show that stray voltage increases with the increase in the unbalance (the zero sequence current).

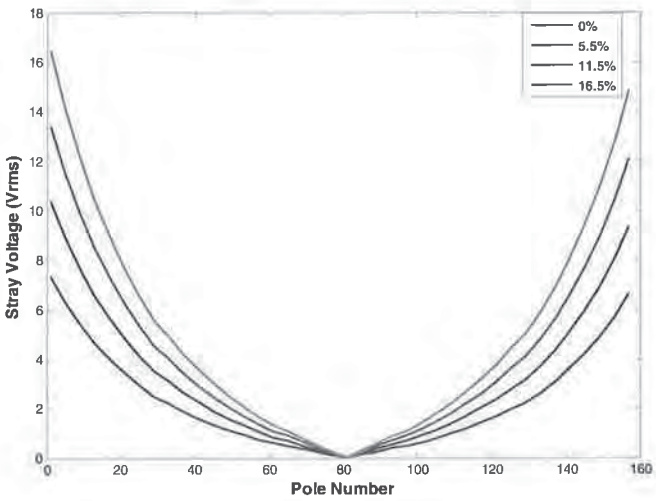

Fig. 12 Impact of unbalance loading on the SV Level on dual supply feeder

Figure 13 shows the stray voltage levels results for different unbalance loading for radial feeder. The results show that the stray voltage increases with the increase in the unbalance in the system.

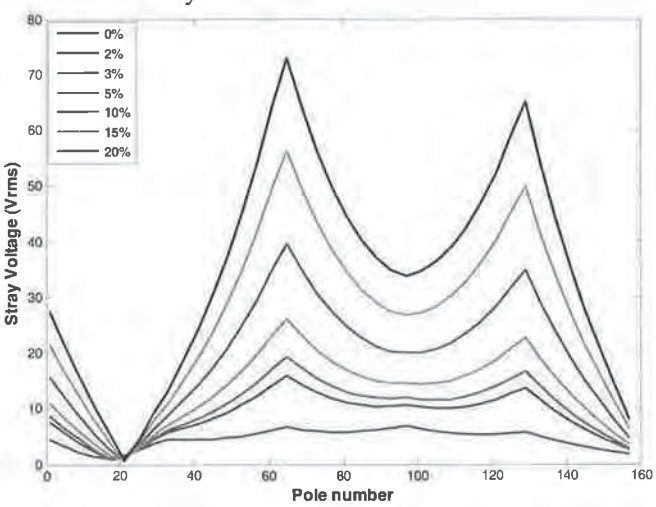

Fig. 13 Impact of unbalance loading on the SV Level on radial feeder

IV. CONCLUSIONS

An EMTP based methodology was developed for simulation and analysis of stray voltage (SV) and neutral-to-earth voltage (NEV) levels as well as the neutral currents along the transmission system under several types of system conditions, or grounding. This enables a better way to understand how different electrical parameters impact the level of SV and currents at points of interest during different utility operating conditions.

Transmission lines induce stray voltage levels for virtually all voltages and configurations. Also, transmission lines will usually cause stray voltage that, measured with a voltmeter, may exceed the threshold limits of regulatory bodies. The effect of the stray voltage on humans and animals is highly affected by the surrounding condition (earth resistivity, contact resistance, etc).

Finally, the main conclusions for this analysis are:

- Substation grounding has a significant impact on SV levels
- Line loading plays a significant role in SV levels
- Unbalanced transmission line current loading increases the stray voltage levels.
- Line Span length does not have much impact on the SV.
- The stray voltage profile depends on the transmission line boundary conditions.

V. REFERENCES

[1] A.M. Lefcourt, "Effects of Electrical Voltage/Current on Farm Animals: How To Detect and Remedy Problems," U.S. Department of Agriculture, Agriculture Handbook No. 696, 1991.

[2] J. Burke, "The Confusion Surrounding Stray Voltage", 2007 IEEE Rural Electric Power Conference, P. C1-C5.

[3] T.A. Short, "Electric Power Distribution Handbook", CRC press, 2004

[4] E. R. Collins, and J. Jiang, "Analysis of Elevated Neutral-to-Earth Voltage in Distribution Systems With Harmonic Distortion" IEEE Transaction on power delivery, Vol. 24, No.3, July 2009

[5] D. J. Ward, J. F. Buch, T.M. Kulas, and W. J. Ros, "An Analysis of the Five-Wire distribution system" IEEE Transaction on power delivery, Vol. 18, No.1 Jan 2003

[6] T. C. Surbrook, N. D. Reese, A. M. Kehrle," Stray Voltage: Sources and Solutions", IEEE Transactions on Industry Applications, Vol. IA-22, No. 2, March 1983.

[7] M. E. Galey, "Benefits of performing unbalanced voltage calculations," IEEE Transactions on Industry Applications, Vol. IA-24, No. 1, Jan-Feb 1988, pp. 15-24.

[8] J. Burke, *Power Distribution Engineering: Fundamentals and Applications*, Marcel Dekker, INC., 1994.

[9] J. Burke, C. Untiedt, "Stray Voltage: Two Different Perspectives" – IEEE REPC 2008

[10] IEEE Std. 80-2000, IEEE Guide for Safety in AC Substation Grounding.

[11] IEEE Std. C2-2007 The National Electrical Safety Code,2006

Nagy Abed (M'07-SM'09). He received his B.Sc. and M.Sc. degrees from Mansoura University, Egypt, and his PhD from Florida International University, Miami. His research interests include power system modeling, fault diagnosis, power quality, FACTS devices, Application of Finite Element in power system and real time control with HIL. He published more than 43 articles and technical papers in refereed Journals and Conference Proceedings.

Sasan Salem is a Principal Engineer with Quanta Technology. He received his BS in Electrical Power Engineering form Iran university of Science and Technology and his M.Sc. from Concordia University in Montreal. His main research interests include power system analysis and control and FACTS applications in power systems.

Jim Burke is an Executive Advisor with Quanta Technology. He has been in the industry over 43 years. He is the former chair of the IEEE Distribution Subcommittee as well as the Working Group on Distribution Neutral Grounding. He is a Fellow of the IEEE

SAWTOOTH LAW
OFFICES, PLLC

ATTACHMENT

9

Induced Stray Voltages from Transmission Lines

Shashi Patel, *Senior Member, IEEE and* Frank C. Lambert, *Senior Member, IEEE*

Abstract— **Stray voltages are inherent in four-wire multigrounded distribution systems. At the customer's premise, these voltages result from the interaction of multiple parameters of the primary and secondary neutral systems. The causes of stray voltages typically include large unbalanced loads in the neutral system, high neutral impedance, and lack of equipotential grounding at the customer's premise. Non-conventional sources of stray voltages may also exist. These sources may consist of large triplen harmonic currents on the neutral system or induction from a nearby transmission line. This paper describes a case study involving induced stray voltages on a single phase distribution line running parallel with a 500 kV transmission line.**

Index Terms—**stray voltage, induction, transmission line**

I. Introduction

It is not uncommon for a distribution line to co-exist with a transmission line, either on the same right-of-way or as an underbuilt circuit. For such distribution lines, high neutral to earth voltages (N-E voltages) due to induction are always a concern. Underbuilt distribution lines are subject to higher NEVs due to close proximity of the transmission line.

The following factors contribute to induced stray voltages on a distribution line:

- Currents in the transmission line conductors
- Proximity of the distribution line to the transmission line
- Length of the parallel section
- Additive phase angle between the induced and load related currents in the neutral system
- Soil resistivity along the parallel section

This paper describes a case study involving induction related stray voltage concern, measurement, analysis, and mitigation.

II. Concern

This project investigated stray voltage concerns caused by a 500 kV transmission line. The transmission line parallels a one mile section of a 13 kV distribution feeder and is believed to be the primary source for the stray voltage. When the problem was first detected, approximately 18 volts was measured at a customer's spigot. At the time of the investigation, the customer and his daughter each owned a house at the southern end of the parallel section.

Initially, the utility company carried out several investigations and applied various mitigation means on the feeder and at the customers' houses. The most effective mitigation means was the installation of surge arresters between the primary and secondary neutrals at the two houses. Although the stray voltage problem was effectively mitigated, concerns for other customers along the parallel section remained. Future expansion in the area was another reason why the utility company owning the distribution system wanted stray voltage mitigation for the entire tap.

III. Scope

The project scope included measuring stray voltage and related parameters, identifying various stray voltage sources, and finally recommending mitigation means that could be effectively applied. A computer program was used to model the transmission and distribution systems. NEETRAC validated the computer model first by comparing the analyzed data with the measured data. In the next step, source identification and mitigation analysis were performed. Based on this analysis, NEETRAC made recommendations for effective mitigation of stray voltages along the parallel section.

IV. Identification of Stray Voltage Sources

The first set of measurements consisted of identifying stray voltage sources such as a corroded neutral or a low voltage, high impedance fault in the area. The measured data showed that these sources were not present in and around the customer houses. The next set of tests focused on measuring stray voltages due to induction from the 500 kV transmission line and those due to the load current in the neutral. NEETRAC's measurements and the prior measurements performed by the utility company identified these two sources as the main contributors for the stray voltage problem on the tap line.

Prior to NEETRAC's involvement, the utility company had measured the stray voltages with the transmission line energized and de-energized. These measurements indicated that the induction from the 500 kV transmission line contributed approximately 73% and the load current in the neutral contributed the rest. The computer study provided more insight into the nature of these two stray voltage sources

Manuscript received April 11, 2005. This work was supported by the Georgia Transmission Corporation. S. G. Patel (e-mail: Shashi.Patel@neetrac.gatech.edu) Frank C. Lambert (e-mail: Frank.Lambert@neetrac.gatech.edu) and are with the National Electric Energy Testing Research and Applications Center (NEETRAC) who performed the subject work. NEETRAC is a Center of The Georgia Institute of Technology.

0-7803-9193-4/06/$20.00 ©2006 IEEE.

and also helped understand the relationship between them. Understanding this relationship aided NEETRAC in recommending appropriate mitigation means.

Figure 1 shows the computer model used for the analysis. A total of five different operation scenarios, as listed below, were studied:

1. 500 kV line opened at TSub-A only *
2. 500 kV line opened at TSub-B only *
3. 500 kV line opened at both substations *
4. Distribution line de-energized with the 500 kV line carrying full load
5. Distribution and 500 kV lines carrying full load (Base Case)

* Distribution line de-energized

Figure 1 also shows the neutral currents and N-E voltages at key locations for the five scenarios described above. Comparing the base case data (Scenario 5) with the data for other operating scenarios helped determine the contributions made by various stray voltage sources.

The data in Figure 1 indicates that the N-E voltages along the tap line are almost entirely dictated by the load flow in the 500 kV transmission line. The phase angle difference between the voltage caused by the induction and that caused by the distribution loads is such that the latter source has virtually no influence in the net N-E voltage at the customer's premise. For example, the "base case" N-E voltage at the customer's premise is 14.3 volts. This N-E voltage includes the contribution made by various loads on the distribution system. When the entire distribution system is de-energized, the N-E voltage at the customer's premise remains almost the same, 14.5 volts.

V. MITIGATION

The next step consisted of evaluating several mitigation means for their effectiveness in reducing the stray voltage at the customer's premise. In each case, the mitigation effectiveness was determined by comparing the corresponding stray voltage with that for the "base case".

The following mitigation methods were evaluated:

1. Isolating the primary neutral from the secondary neutral at the customer's transformer.
2. Moving the distribution tap line 2,500 feet from the transmission line.
3. Installing a 5 Ω ground well at each pole along the distribution tap line.
4. Bringing an additional two phases to the customer's transformer and balancing the load.
5. Installing a continuous counterpoise, 2/0 copper conductor, along the distribution tap line and connecting to the downlead at each pole.
6. Installing primary isolation transformers along the distribution tap line.

With the exception of Mitigation #5 (continuous counterpoise along the distribution tap line), all of the mitigation means were evaluated with the computer model. Because the software used for this investigation is not capable of modeling a continuous counterpoise in a mutually coupled system, this evaluation consisted of installing the counterpoise along the tap line and measuring the N-E voltages.

<u>Mitigation Methods 1 through 4 (Neutral Isolation, Tap Relocation, 5 Ω Pole Ground, and Three Phase Tap Line)</u>

For an individual customer, the most effective mitigation means is isolation of the primary neutral from the secondary neutral at the customer's transformer. The utility company had initially installed neutral isolators at the customer's transformers. During maximum loading conditions, the voltages across the blockers were exceeding their ratings, thereby rendering them ineffective. The blockers were then replaced with 3 kV surge arresters.

Following installation of surge arresters, stray voltages at the houses reduced to extremely low values. The computer data also showed that the "base case" N-E voltage at the customer's premise reduced from 14.3 volts to 0.01 volts. However, the N-E voltage on the primary side increased from 14.3 volts to 15.7 volts. This voltage appears at the neighboring houses which are not protected with neutral isolators. In general, the increase in the N-E voltage on the primary side following the neutral isolation is in inverse proportion to the resistance of the grounding system at the customer's house.

Minimizing induction from the transmission line as a mitigation means was also studied. One approach to reduce induction is to move the distribution tap line away from the 500 kV transmission line. In addition to increasing the separation distance between parallel line sections, the effectiveness of this mitigation method also depends on the soil resistivity values in the area. The soil resistivity along the distribution tap line, as determined in the past investigations, is extremely high. As a result, it was anticipated that the tap line would have to be relocated a significant distance from its present location for the desired reduction in induced voltage.

The computer analysis indicated that the distribution tap line would have to be relocated approximately 2,500 feet from the 500 kV transmission line to reduce the "base case" N-E voltage at the customer's premise by 40%. In addition to the cost, this solution was also impractical to implement due to its adverse effects on the customers that are presently served by the distribution tap line.

Installing a low resistance ground at each pole along the entire length of the distribution tap line was also analyzed. The computer study indicated that installing a ground well with approximately 5Ω resistance at each pole could reduce the customer's N-E voltage by 40%.

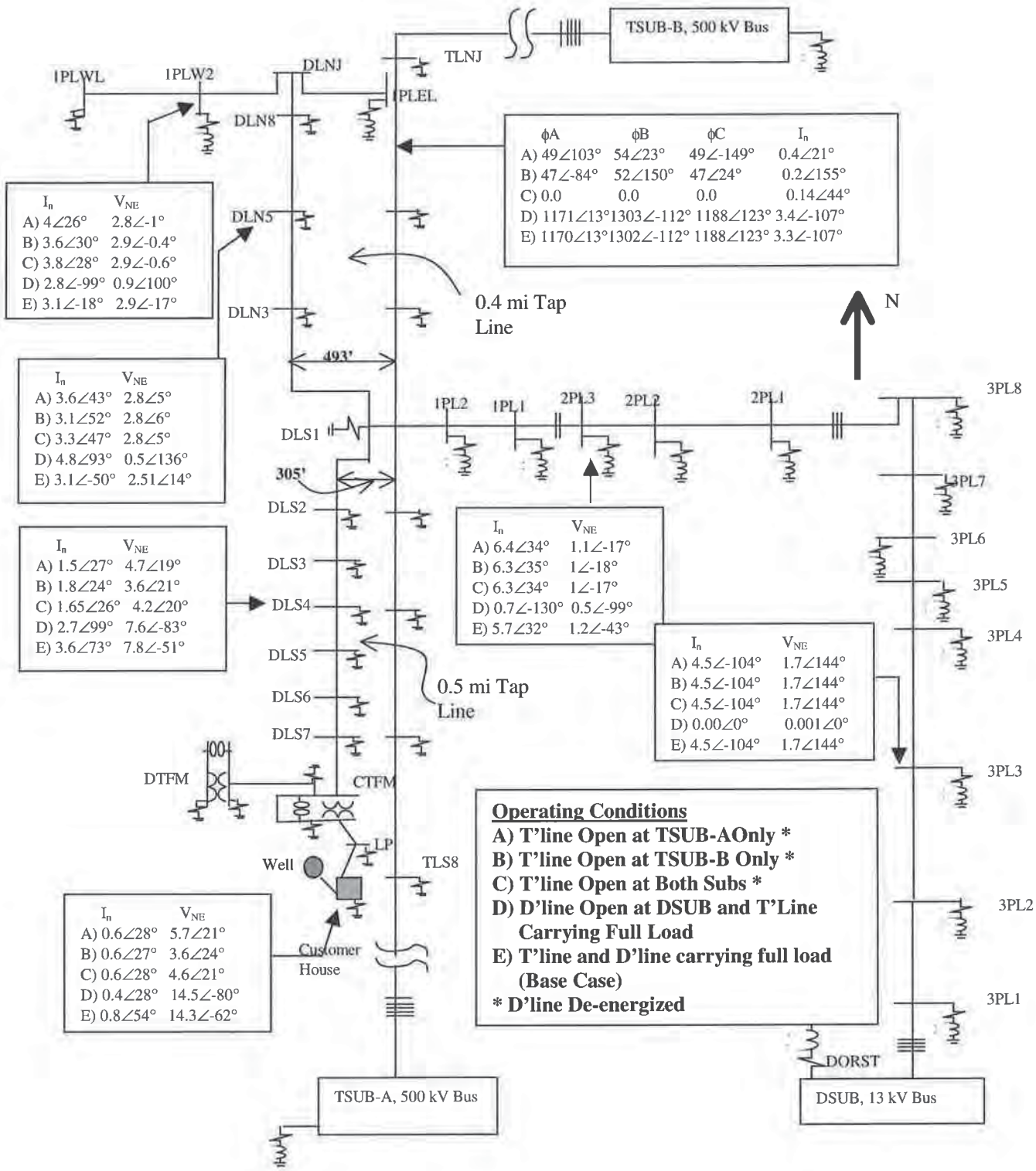

Figure 1: Distribution System Neutral Currents and N-E Voltages due to Various System Operating Conditions - Source Identification

Drilling eight ground wells, one at each pole, is an expensive solution. Also, there is no guarantee that the goal of achieving 5Ω resistance at each pole can be met in high resistivity, sandy soil.

Since the distribution load provides only a small contribution to the stray voltage problem, bringing in an additional two phases to the customer's transformer and balancing the load was not expected to offer much improvement. The computer analysis confirmed this conclusion. The N-E voltage at the customer's premise actually increased from 14.3 volts to 16.3 volts when the entire distribution tap line was modeled as a three phase line with nearly equal loads on each phase.

Mitigation Method 5 (Continuous Counterpoise)

Although installing 3 kV surge arresters effectively solved the stray voltage problem, the utility company had concern regarding future load growth, particularly in the area beyond the customer's house. This and safety related concerns for using 3 kV surge arresters for isolation prompted the utility company to look for mitigation means that could reduce the influence of induced voltage and current along the distribution tap line. In response to this need, NEETRAC recommended installation of a continuous counterpoise (2/0 bare copper conductor) along the distribution tap line. Due to modeling limitations, the effectiveness of this solution could not be evaluated.

The utility company installed the continuous counterpoise from the customer's transformer (CTFM) to the pole at DSL for evaluation (Figure 1). This counterpoise was connected to the downlead at each pole along the tap. Additional ground rods were also installed and connected to the counterpoise at each pole. The voltage measurements obtained at the customer's transformer following the installation of the counterpoise showed no improvement. The utility personnel measured 15.5 volts from the transformer ground to a remote probe and 16.5 volts across the surge arrester providing the neutral isolation.

Mitigation Method 6 (Isolation Transformers along the Distribution Tap Line)

The induced voltage is directly proportional to the length of the parallel lines. In the present case, approximately one mile of single phase distribution tap line parallels the 500 kV transmission line. Breaking up the total length of the parallel section into one or more smaller sections should reduce the induced voltage on each section. This mitigation method was analyzed using the computer model. A field installation including the measurements followed this computer analysis. Figure 2 shows the neutral currents and N-E voltages at some key locations for four different combinations of isolation transformers and their locations between the customer transformer and the tap point (DSL1). Note that the mitigation effectiveness of each transformer / location combination can be determined by comparing the corresponding N-E voltage with the "base case" N-E voltage.

Referring to Figure 2, the isolation transformer at DLS5 reduces the N-E voltage at the customer transformer significantly. However, N-E voltages increase between DLS5 and DLS1. Placing an additional transformer at DLS1 reduces these N-E voltages.

NEETRAC and the utility company involved felt that field tests should be performed to validate the effectiveness of isolation transformers as indicated in Figure 2. Since isolation transformers for primary system applications are not routinely manufactured, obtaining such a transformer with short notice was difficult. The field tests, as a result, were performed by installing two 7.6kV/240-120V, 50 kVA transformers connected back-to-back. The transformers were mounted on a wood pole at DLS1.

Table 1 shows the N-E voltages measured at the customer's transformer, both with and without the isolation transformers connected at DLS1. For comparison, the table also shows the computed data.

Referring to Table 1, isolation transformers located at DLS1 reduce the N-E voltage between the customer's primary pole ground to a remote probe from 14.7 volts to 5.3 volts, a 64% reduction. A similar reduction was recorded in the N-E voltage across the secondary neutral isolator (3 kV surge arrester) at the customer's transformer.

For an isolation transformer to be effective, the telephone or cable TV shield wires must not be continuous across the transformer. Table 1 shows that the computed data are in good agreement with the measured data once the telephone shield wires were isolated across the transformers.

Table 1 Validation of Isolation Transformer Effectiveness – Two 7.6kV/120-240V Transformers Installed Back-to-Back at DLS1 (Figure 2)

Test Scenario	Measured V_{NE} (Volts)	Computed V_{NE} (Volts)
No isolation transformer (Base case)	14.7	14.3 ∠-62°
Primary isolation transformer at DLS1, telephone shield across isolation transformer continuous	8.4	Not calculated
Primary isolation transformer at DLS1, telephone shield across isolation transformer isolated	5.3	5.5 ∠-67°

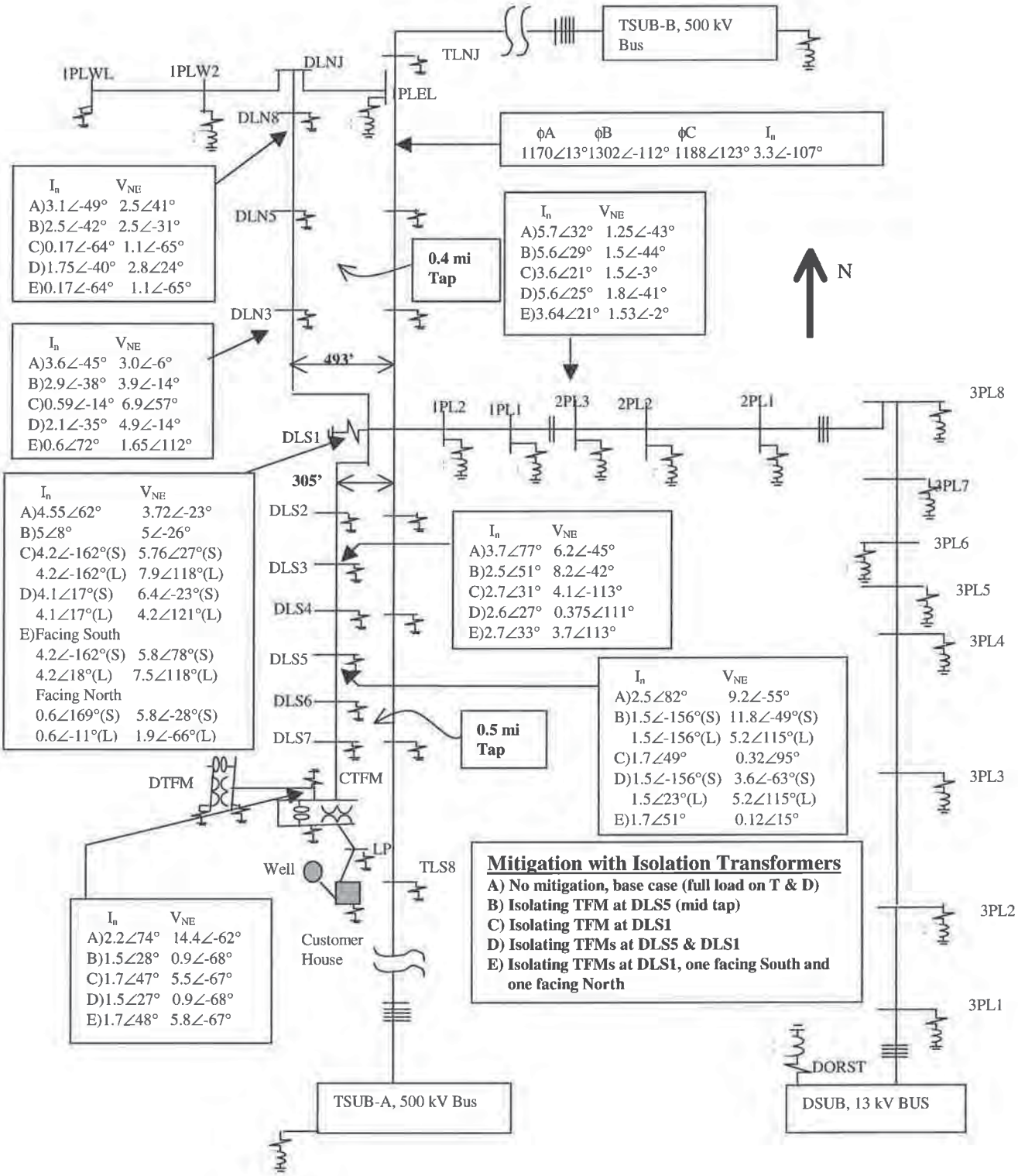

Figure 2: Distribution System Neutral Currents and N-E Voltages –
Effectiveness of Isolation Transformers in Reducing Stray Voltages along the Primary

VI. Conclusions

There are several conclusions that resulted from the analysis of induced stray voltages and mitigation means performed in this project. The following is a summary of these conclusions:

1) Compared to stray voltages resulting from an unbalanced load in the neutral, stray voltages due to induction can be significantly higher. In such a case, many of the traditional mitigation means (balanced load on three phase circuit, lowering ground resistance, increasing neutral conductor size, etc.) will not be effective.
2) The induced stray voltage problem may exist at several houses along the parallel section of the distribution line. Installing neutral isolators at these houses will solve individual stray voltage problems but will significantly increase N-E voltages at unprotected houses.
3) Installation of one or more isolation transformers along the parallel section breaks up large loops formed between the phase conductors, neutral conductor and ground into smaller loops. This, in turn, reduces the N-E voltages along the parallel section.
4) To insure the maximum effectiveness, cable and telephone grounding circuits must be isolated across the isolation transformers.

References

1) William Dick, David Winter, *Computations, Measurement and Mitigation of Neutral-to-Earth Potentials on Electrical Distribution Systems*, IEEE Transaction on Power Delivery, Vol. PWRD-2, No.2, April 1987.

2) James Donald, Claude M. Hertz, Ivan Winsett, *Results of Initial Field Installations of Magnetic Saturation Blockers for Minimization of Stray Voltage on Dairy Farms*, American Society of Agricultural Engineers, Paper No. 156-170, February 1984.

3) C. F. Dalziel, W. R. Lee, *Electric Shock Hazard,* IEEE Spectrum, Vol. 6, No.2, February 1969.

4) EPRI TR-113566, *Identifying, Diagnosing, and Resolving Residential Shocking Incidents*, Final Report, September 1999.

5) EPRI TR-106661-V1, *Distribution Grounding – Volume 1: Handbook*, Project 3066-01, Final Report, August 1996.

6) USDA Agriculture Handbook 696, *Effects of Electrical Voltage/Current on Farm Animals (How to Detect and Remedy Problems)*, December 1991.

Biography

Shashi Patel (Senior Member) was born in the Fiji Islands and grew up in India. He received a BS (EE) degree from India and MS (EE) degree from the Georgia Institute of Technology in 1976. He worked for a state owned utility company in India from 1965 to 1967 and started his career in the U.S.A. with Bonneville Power Administration, Portland, Oregon in 1969. Georgia Power Company employed him in 1970. Shashi retired from Georgia Power Company in 1995. Since that time, he has worked as a Senior Research Engineer at NEETRAC, a Center of Georgia Tech. Throughout his professional career, he has been involved in special projects covering a wide variety of areas, including power system studies, lightning and fault vulnerability investigations, high voltage testing, power system grounding, stray voltage investigations and underground corrosion.

Frank C. Lambert (Senior Member) received BEE and MSEE degrees from the Georgia Institute of Technology in 1973 and 1976, respectively. Before joining NEETRAC, Mr. Lambert was employed for twenty-two years at Georgia Power Company where his responsibilities included research, distribution automation, network underground, distribution and transmission system design, construction, operation, maintenance, and evaluation. He is currently Program Manager for Electrical Systems at NEETRAC, a Center of Georgia Tech, where his responsibilities include research and development projects related to power quality, grounding, power electronics, distributed generation, power systems analysis, and high voltage and high current testing.

SAWTOOTH LAW
OFFICES, PLLC

ATTACHMENT

10

National Electric Energy Testing, Research & Applications Center

NETRAC

A Research Center of the Georgia Institute of Technology

Induced Stray Voltages from Transmission Lines

Shashi Patel
Frank Lambert

Introduction

- Conventional stray voltage sources include unbalanced loads, neutral impedances, and high earth voltage gradients.
- Non-conventional sources include triplen harmonic neutral currents and induction from nearby transmission lines.

Induced Stray Voltages - Parameters

- Currents in transmission lines
- Proximity to distribution line
- Length of parallel section
- Additive phase angle between induced and load currents in the grounded neutral system
- Soil resistivity

Concern

- Stray voltage on a single phase tap line (7.2 kV) caused by a 500 kV transmission line
- Parallel section – Approximately 1 mile
- Average Distribution Pole Spacing – Approximately 350'
- Approximately 14 volts at the faucet of a customer at the end of the tap line

Project Scope

- NEETRAC and prior measurements
- Identification of various sources
- Computer modeling and validation with the measured data
- Performing studies to evaluate effectiveness of various stray voltage mitigation methods

Measurements by NEETRAC

- First set of measurements involved identifying house wiring, secondary neutral and buried 120/240 volt service related sources, if any. None was found.
- Second set of measurements included primary profiling from the substation to the customer – phase/neutral currents, NEVs and pole ground resistances

Prior Measurements

- Prior to NEETRAC's involvement, the utility company measured stray voltages at the customer's faucet both with and without energizing the transmission line.
- The measurements indicated that the transmission line contributed approximately 73% of the total stray voltage. The remainder was produced by the load current.

Computer Modeling

- Modeled the subject feeder from the substation to the customer including the parallel transmission line.
- Validated the model by comparing the results with the measured data.
- Identified the sources by simulating various operating conditions.

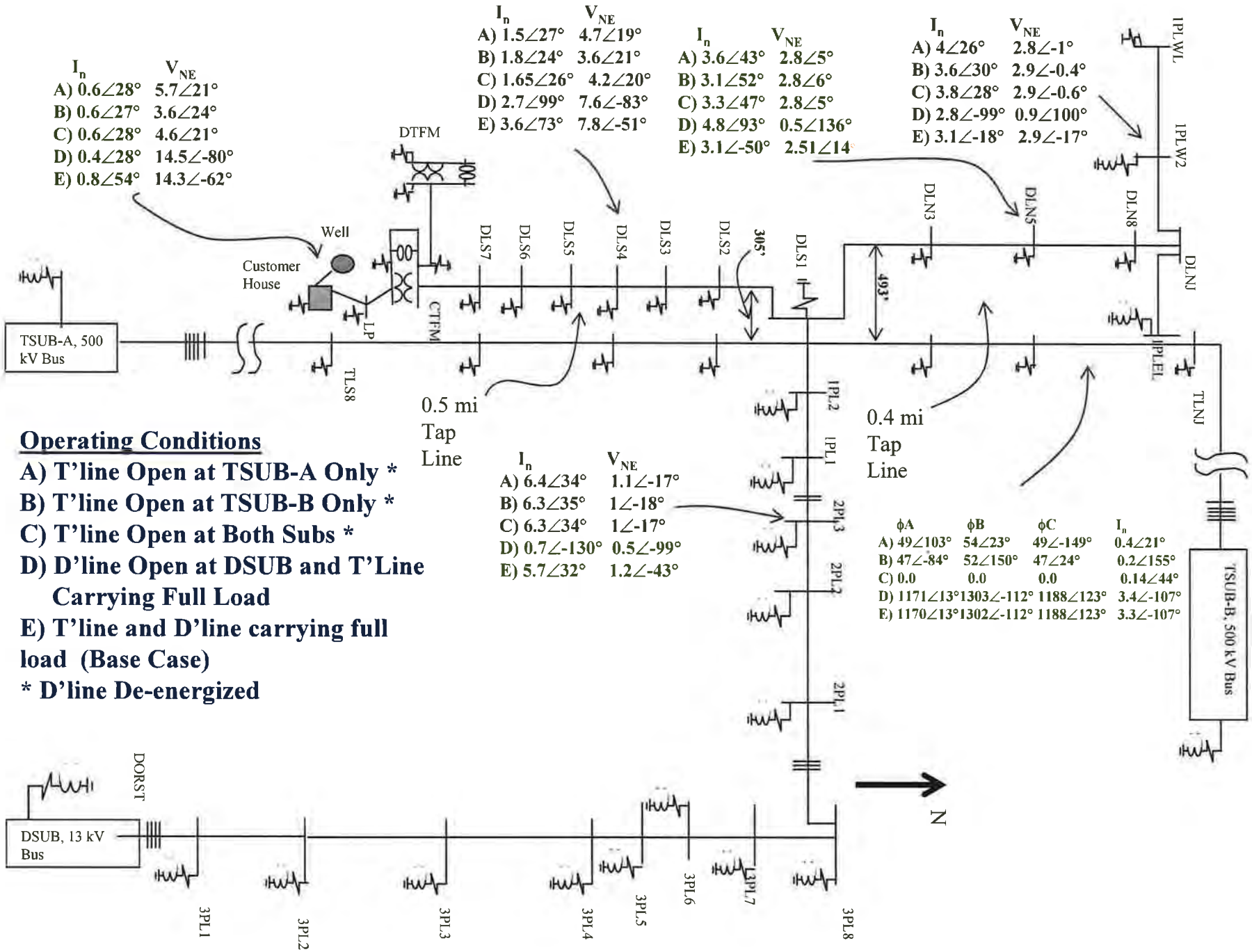

Operating Conditions

A) T'line Open at TSUB-A Only *

B) T'line Open at TSUB-B Only *

C) T'line Open at Both Subs *

D) D'line Open at DSUB and T'Line Carrying Full Load

E) T'line and D'line carrying full load (Base Case)

*** D'line De-energized**

Evaluation of Mitigation Methods

Install neutral isolators

- Initially, blocker ratings will be exceeded during high loading conditions.
- Replaced with 3 kV surge arrester with reduction in stray voltage from 14.3 volts to 0.01 volts.
- The primary NEV increased from 14.3 volts to 15.7 volts.

Evaluation of Mitigation Methods

Move the tap line away

- The tap line would have to be relocated approximately 2,500' from the transmission line to reduce the stray voltage by 40%. This result is partly due to extremely high soil resistivity in the area.
- Besides the cost, this solution was impractical for existing customers.

Evaluation of Mitigation Methods

Install 5 Ohms ground well at each pole

- **Study showed that the stray voltages can be reduced by 40%.**
- **Drilling a ground well at eight locations is expensive.**
- **There is no guarantee that the resistance will be reduced to 5 Ohms.**

Evaluation of Mitigation Methods

Convert the tap to a three phase line and balance the load.

- **The NEV at the customer's transformer pole increased from 14.3 volts to 16.3 volts.**

Evaluation of Mitigation Methods

Install isolation transformers on the tap line

- Breaks the length of the parallel section
- Effective solution for the entire tap
- Cable TV or telephone shields across the isolation transformers must be isolated to increase mitigation effectiveness.
- Proper fuse coordination is required.

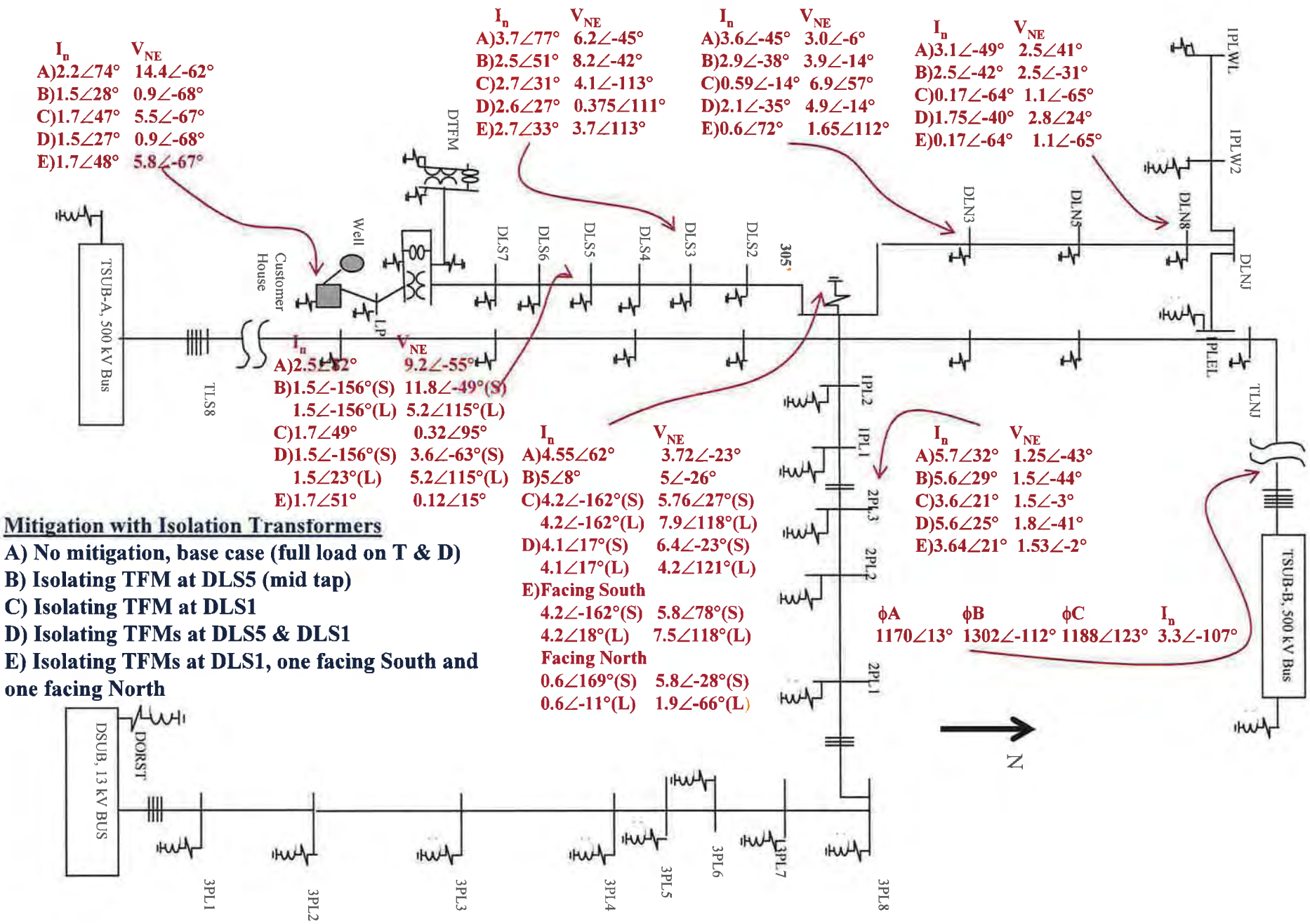

Mitigation with Isolation Transformers

A) No mitigation, base case (full load on T & D)
B) Isolating TFM at DLS5 (mid tap)
C) Isolating TFM at DLS1
D) Isolating TFMs at DLS5 & DLS1
E) Isolating TFMs at DLS1, one facing South and one facing North

101003

Conclusions

- Stray voltages due to induction can be significantly higher compared to those due to load currents.
- Stray voltages due to induction are typically spread along the parallel section serving several customers.
- Most of the traditional mitigation means will not be effective.

Conclusions

- Installation of one or more isolation transformers along the parallel section is an effective solution for the customers served by the tap.
- For effective mitigation, Cable TV and telephone shields must be isolated across the isolation transformers.

Mailing Address
P.O. Box 7985
Boise, Idaho 83707

Boise Office
Golden Eagle Building
1101 W. River St., Ste. 110
Boise, Idaho 83702
Tel. (208) 629-7447
Fax (208) 629-7559

Challis Office
1301 E. Main Ave.
P.O. Box 36
Challis, Idaho 83226
Tel. (208) 879-4488
Fax (208) 879-4248

Twin Falls Office
161 Fifth Avenue South
Twin Falls, Idaho 83301

SAWTOOTH LAW
OFFICES, PLLC

David P. Claiborne
david@sawtoothlaw.com

S. Bryce Farris
bryce@sawtoothlaw.com

Evan T. Roth
evan@sawtoothlaw.com

Daniel V. Steenson
dan@sawtoothlaw.com

James R. Bennetts, of counsel
jim@sawtoothlaw.com

Katie Kelly, legal assistant
katie@sawtoothlaw.com

Melodie Baker, legal assistant
mel@sawtoothlaw.com

Friday, June 28, 2013

Bureau of Land Management
Gateway West Project
P.O. Box 20879
Cheyenne, WY 82003
Via U.S. Mail
and Via E-Mail: ***Gateway_West_WYMail@blm.gov***

RE: Final Environmental Impact Statement (April 2013)
Gateway West Transmission Line Project
Comments of Idaho Dairymen's Association

duplicate

Dear Sir or Madam,

This office represents the Idaho Dairymen's Association, Inc. (herein "IDA"). Please accept this letter, and its attachments, as comments on behalf of IDA relative to the *Gateway West Transmission Line Project Final Environmental Impact Statement*, published April 26, 2013 (herein "FEIS"). IDA believes there are material errors in the FEIS analysis of effects of the proposal in relation to the animal environments related to agriculture (in particular – the dairy industry), and further that other reasonable alternatives could have been selected to avoid those significant impacts. These concerns are expressed in detail below.

Idaho's Dairy Industry

IDA was formed on July 5, 1944 by Idaho's dairy industry leaders. The purpose of IDA is to develop and sustain an economically viable Idaho dairy industry. Initially it was composed of and funded by dairy processors and producers. Today, the IDA falls under the umbrella of the United Dairymen of Idaho (UDI), which was formed in 1980 as a single entity that contains two separate organizations – IDA and the Idaho Dairy Products Commission (IDPC). Each organization serves a different purpose under the auspices of the UDI – IDA deals with industry and government relations projects, while IDPC focuses on promotion and marketing projects. Every dairy producer in the State of Idaho is a member of IDA, and the comments submitted herein are made on their behalf.

In 2003, the Idaho Dairy Environmental Action League (IDEAL) was formed, followed by the creation of the IDEAL Foundation in 2008. The IDA teamed with the IDEAL and the IDEAL Foundation to help the Idaho dairy industry and Idaho communities realize the many social and economic benefits of successful livestock operations, while working to protect and enhance important air, water and soil resources. The IDA works tirelessly at the local, state, regional and federal levels to protect and promote the legislative, regulatory and legal interests of its members. Through cooperation with IDEAL, a legal action and defense fund is now established to promote and defend the interests of the Idaho dairy industry in administrative and legal processes that may impact the industry.

Idaho's dairy industry provides significant resources to support research and promotion of dairy products needed to stabilize and sustain Idaho's dairy industry. The significant resources provided by Idaho dairy farmers helps drive demand for Idaho produced dairy products, which in turn contributes to the financial stability of rural communities and benefits the state and regional economies by dairy farmers continued investment. In 2011, on-farm cash receipts from milk produced on Idaho farms amounted to $2.446 billion dollars, ranking it as the largest single sector in Idaho's agriculture industry. It is estimated that the dairy industry of Idaho employs more than 22,730 individuals in the production, processing, transportation, and distribution of its milk and milk products. Allied industries employ an additional 13,470 workers (e.g., hay growers, corn silage growers, custom operators, dairy equipment manufacturers, feed companies, nutritionists & veterinarians). A significant economic impact for Idaho is realized through personal property tax, income tax, sales tax and retail sales generated from income derived from the dairy industry. Idaho is the 2nd largest milk producing state in the twelve western U.S. states and ranks 3rd among all states. As of December 31, 2011, Idaho had 577 dairy farm operations, which produced 13.223 billion pounds of milk (equivalent to 1.537 billion gallons) from 554,139 cows.

duplicate

The Gateway West Transmission Line Project

The Gateway West Transmission Line Project (herein "Project") is jointly proposed by Idaho Power and Rocky Mountain Power. The companies plan to construct and operate 230 and 500 kilovolt (kV) transmission lines from the Windstar Substation near Glenrock, Wyoming to the Hemingway Substation near Melba, Idaho. The Project is composed of 10 transmission line segments with a total length of approximately 1,000 miles across southern Wyoming and southern Idaho.

The Project would begin at the Windstar Substation in Glenrock, Wyoming and would follow or parallel an existing 230-kV line proposed for reconstruction to the proposed Aeolus Substation near Medicine Bow, Wyoming. It would then proceed as a single-circuit 500-kV line from Aeolus to the Populus Substation near Downey, Idaho. A 345-kV line would connect the Anticline Substation with the Jim Bridger Power Plant. From Populus to the Hemingway Substation southwest of Boise, Idaho, the Project would consist of two single-circuit 500-kV roughly parallel paths—Segments 5, 6, and 8 would travel on a more northerly route toward the Hemingway Substation through the Borah and Midpoint Substations, while Segments 7 and 9 would travel a more southerly route through the proposed Cedar Hill Substation near Murtaugh, Idaho, to the Hemingway Substation. Segment 10 would provide an interconnection

between the Cedar Hill and Midpoint Substations and also provide an interconnection between the more northerly and more southerly routes. The Proponents have proposed this split because of the need to serve loads along the way and also to increase reliability.

The transmission line segments would cross federal, state, and private lands. The ROW width requested for the transmission line ranges from 125 feet for the single-circuit 230kV segment to 250 feet. Approximately 49 percent of the land to be crossed is federal, 7 percent state, and nearly 44 percent is privately owned. The Proponents would negotiate details regarding needed land acquisition across privately owned lands, either in fee or as an easement, for the transmission line and associated facilities (substations, etc.) with each landowner. In exchange for the right to operate the transmission line and facilities, the Proponents would compensate the landowner for the use of the land. Although BLM does not have the legal authority to enforce stipulations on private lands, BLM has recognized and agrees it has the obligation to recommend stipulations to reduce impacts as part of the NEPA process. FEIS, at 1-36. As part of the NEPA analysis, BLM must analyze the potential environmental impacts of the Project, whether those effects will be realized on public or private lands. See, e.g., Citizens for a Better Henderson v. BLM, 768 F.2d 1051 (10th Cir. 1985) (holding that, in an EIS for a proposed power transmission line, BLM was required to determine hazards posed by the electrical line to private citizens residing on private land adjacent to a federal right-of-way corridor).

duplicate

As part of the analysis of the Project, significant issues for analysis have been identified. As is relevant to the comments provided herein, the following significant issues have been identified –

Land Use and Recreation

- How would the project affect concentrated animal feeding operations (CAFO), which include dairy producers? FEIS, at 1-49.
- How would the project affect current agricultural systems, including pivot irrigation and advanced positioning systems used in farm equipment? FEIS, at 1-49.

Agriculture

- How much agricultural land would be impacted, and what would the effects be? FEIS, at 1-50.
- What would be the impacts to agricultural production including equipment operation and aerial spraying? FEIS, at 1-50.
- Would there be a disruption to dairy operations and other types of CAFOs? FEIS, at 1-50.
- Would the transmission line cause electronic interference with agricultural equipment? FEIS, at 1-50.

Electrical Environment

- Would electric and magnetic fields (EMF) associated with transmission lines cause health effects? FEIS, at 1-51.
- Would stray voltage be a concern in the context of animal care where unwanted voltage on feeders, watering stations, or equipment such as milking machines, can lead to reduced food or water intake? FEIS, at 1-51.[1]

[1] In the dairy environment, unwanted voltage may also be experienced at headlocks, loop stalls and fencing.

All of the above issues describe potential impacts to IDA members' dairy operations. For example, one IDA member, Curtis DeVries, is a dairy producer with facilities located near Kuna Cave Road, Kuna, Idaho. This area of operation is indicated on **Attachment 1**, and is located within the area impacted by the preferred alternative. As is readily apparent, the transmission line would cut through the middle of two pivot-irrigated fields, and comes within less than one mile of milking parlors. Had BLM instead selected the Project proponent's proposed route, several miles to the south, any impacts to dairy producers would have been avoided. See **Attachment 2**.

Another IDA Member, Aardema Dairy, is a dairy producer with facilities located just west of U.S. Highway 93 and the E 700 N Road, near Jerome, Idaho. This area of operation is indicated on **Attachment 3**, and is located within the area impacted by the preferred alternative. Another dairy, along River Ranch Road south of Gooding, is also adjacent to the preferred alternative. The transmission line in these areas will interfere with several pivot irrigated fields, and impact milking parlors and feedlots associated with the dairy that are located within the impact zone. Had BLM instead selected the Project proponent's proposed alternative route, just to the south, several other dairy operations would be located within the impact zone. These include operations along the E 2400 S Road near Hagerman, Idaho, and along the S 1300 E Road, also near Hagerman. See **Attachment 4**. For these reasons, the IDA suggests consideration of two other reasonable alternatives, one at the Midpoint Substation, proceeding north therefrom and bypassing the nearby dairy operations to connect back to the preferred alternative, and the other bypassing River Ranch Road south of Gooding to avoid that dairy operation. See **Attachment 5**.

Yet another IDA member, Bettencourt Dairies, is a dairy producer with facilities located along the 800 S Road south of Kimberly, Idaho. This operation is indicated on **Attachment 6**, and is located within the area impacted by the preferred alternative. As is readily apparent, the transmission line would come within less than one mile of milking parlors. Had BLM instead selected the Project proponent's proposed alternative route, incoming from the south, any impacts to dairy producers would have been avoided. See **Attachment 7**.

There may be other affected dairy operators, and the concerns of IDA extend to all dairy operations potentially impacted by the Project. After the FEIS was published, the detailed mapping of CAFOs conducted by Tetra Tech was requested of the BLM, but it has yet to be received.[2] After analysis of that data, once provided, the IDA will be better positioned to identify all impacted dairies, and reserves the right to supplement these comments once the BLM provides the previously requested information.

[2] This office requested that information by email to Gateway_West_WYMail@blm.gov on May 9, 2013. The email requested the Tetra Tech 2010a report and mapping referenced at Ch. 3, Sec. 18, pg. 12 of the FEIS. No response to that communication has been provided.

duplicate

Stray Voltage and its Effects

The primary concern of the IDA with respect to location of the transmission line is stray voltage and its effects on the domestic animal environment. To avoid these effects, the transmission line should be located away from dairy operations, milking parlors and dairy feedlots.

Stray voltage is basically a form of neutral-to-earth voltage to a specific location. See Abed, Salem & Burke, *Evaluation of Induced Stray Voltages from Transmission Lines using EMTP*, at 1 (copy at **Attachment 8**). Most concerns with stray voltage in the dairy industry occur due to induction. *Id.* Animals are sensitive to stray voltage and suffer effects therefrom even when humans may not notice the stray voltage. *Id.* At 1 volt of contact, a cow experiences negative effects such as decreased milk production, reluctance to eat or drink, and other erratic behavior are noticeable. *Id.* In the Abed, Salem & Burke study, a 13.8 kV transmission line, with three-phase multi-grounding consistent with the IEEE National Electric Safety Code, was analyzed for stray voltage effects. *Id.* at 2. The study found that such a transmission line, through almost any scenario, induced stray voltage of an amount significant enough to effect animal behavior. *Id.* at 5. Recall that the Project will involve 230 kV and 500 kV transmission lines, well in excess of the study model, making it a near certainty that stray voltage induction will be significant in the dairy environment.

Exacerbating the stray voltage effects of transmission lines is the effect of nearby distribution lines. Studies have confirmed that transmission lines will cause parallel distribution lines within one mile to induce stray voltage. See Patel & Lambert, *Induced Stray Voltages from Transmission Lines* (copy at **Attachment 9** and **Attachment 10**). In the referenced study, the experts examined the interplay between a 500 kV transmission line and a 13kV distribution feeder line. *Id.* at 1. They found induced stray voltage as high as 18 volts along a distribution feeder parallel to the transmission line – an amount of voltage clearly enough to effect animal behavior. *Id.* Of the stray voltage, 73% was due to the load current in the 500 kV transmission line, while the remaining 27% was due to the distribution feeder. *Id.* The experts were able to rule out any other contributors to stray voltage, such as corroded neutrals or other conditions on the farm property. *Id.* They then evaluated various means of mitigation. *Id.* at 2-5. It was determined that traditional means of mitigation, such as a balanced load on a three phase circuit, was not effective to eliminate the stray voltage. *Id.* at 6. Also, installing neutral isolators at areas with high stray voltage would cause an increase in stray voltage in other areas. *Id.* So, in essence, proper mitigation would require isolation transformers at nearly all distribution areas parallel to the transmission line, and cable and telephone grounding circuits would need to be isolated from the electric isolation transformers. *Id.* In most cases, this would require significant modifications to existing systems.

The FEIS acknowledges that dairy farms could be subjected to stray voltage once the Project goes live. FEIS, at 3.18-25. However, the FEIS incorrectly concludes that stray voltage effects on cows are due to "electrical equipment on the farm and local electrical wiring, not because of the operation of nearby transmission lines." *Id.* The actual scientific data, as detailed above and in the attachments, demonstrates that transmission lines carrying loads equivalent to the Project contribute 73% of the

duplicate

stray voltage in areas where power is locally distributed within one mile of the transmission line, and which is experienced after isolating all on-farm contributors.

The FEIS also concludes that "most cows would need a current of 3 to 4 volts before behavioral changes could be noticed." FEIS, at 3.18-25. This is another error in the FEIS conclusions. Available science actually indicates cow behavior changes at as little as one volt of induced stray voltage. Moreover, the test case on a transmission line comparable to the Project found induced stray voltage as high as 18 volts, admittedly enough to effect dairy cow behavior under the FEIS conclusion. The 500 kV proposed transmission lines will undoubtedly induce stray voltage of a high enough amount to effect dairy cow behavior, and the FEIS fails to recognize this fact and analyze the alternatives in light of this information.

Later, the FEIS concludes that "transmission lines such as the one proposed are not normally associated with . . . stray voltage because the transmission line is a balanced, three-phase line." FEIS, at 3.21-12. This is yet another flaw in the FEIS. As detailed above, test cases on transmission lines as low as 13.8 kV, with three-phase balanced loads, have found induced stray voltage high enough to effect animal behavior.

The FEIS also concludes that the Project should not pose a concern to dairies in Idaho because the preferred route is not close enough to any dairies to cause an impact. This is simply untrue. As detailed above, at least two dairies are within the impact zone of the preferred route, and the available studies indicate that stray voltage with a negative effect on cow behavior will likely occur as a result. The FEIS fails to acknowledge this, and fails to accept other alternatives that could avoid such an impact.

The FEIS concludes that "Gateway West should not affect local distribution systems or create a change in the occurrence of stray voltage." FEIS, at 3.21-33. This is yet another fundamental flaw in the FEIS' conclusions regarding stray voltage. The scientific studies, detailed above and attached, show that a 500 kV transmission line will significantly effect induced stray voltage, will heighten the same, and will contribute as much as 73% of the resultant stray voltage.

duplicate

Conclusion

The FEIS is significantly flawed with respect to its analysis of induced stray voltage and the effect thereof on dairy operations. The FEIS fails to acknowledge the effects the stray voltage will have on domestic animal behavior. The FEIS should have appropriately addressed these issues as explained above. In light thereof, with respect to Segment 8, from I-84/Boise Stage Stop to Hemingway Substation, the FEIS should have selected the Project proponent's proposed route. Also with respect to Segment 8, from the Midpoint Substation to north of Glenns Ferry, the FEIS should have selected, or at least considered, two different alternatives, as reflected on **Attachment 5**, so as to avoid dairy impacts. With respect to Segment 7, from Albion Valley Road to the Cedar Hill Substation, the FEIS should have selected the Project proponent's proposed alternative route. These selections would have completely avoided any dairy impacts. The IDA suggests that either: (1) any record of decision select the above alternatives with respect to the designated segments; or, alternatively, (2) that further study and analysis be conducted of

SAWTOOTH LAW
OFFICES, PLLC

the Project corridor, in light of the above stray voltage discussion, and a supplemental EIS be issued for further comment, analysis and discussion.

Thank you for the opportunity to comment. We trust that the above will be well-received and fully considered.

Very Truly Yours,

Daniel V. Steenson
David P. Claiborne

Encl.

cc: Idaho Dairymen's Association (w/ encl.)
Bonnie Butler, Office of the Governor (w/ encl.)
Celia R. Gould, Director, Idaho Dept. of Agriculture (w/ encl.)

duplicate

SAWTOOTH LAW
OFFICES, PLLC

ATTACHMENT

1

duplicate

101003

duplicate

SAWTOOTH LAW
OFFICES, PLLC

ATTACHMENT

2

duplicate

duplicate

SAWTOOTH LAW
Offices, PLLC

ATTACHMENT

3

duplicate

101003

duplicate

SAWTOOTH LAW
OFFICES PLLC

ATTACHMENT

4

duplicate

Malad Gorge State Park
Shoe String Rd
E 2300 S
E 2350 S
E 2900 S
E 2950 S
Hagerman Hwy
Wendell
Google

duplicate

SAWTOOTH LAW
OFFICES, PLLC

ATTACHMENT

5

duplicate

duplicate

—— = Proposed Alternative for Consideration

duplicate

—— = Proposed Alternative for Consideration

SAWTOOTH LAW
OFFICES, PLLC

ATTACHMENT

6

duplicate

101003

duplicate

SAWTOOTH LAW
OFFICES, PLLC

ATTACHMENT

7

duplicate

Gooding
State Park
Jerome
Bohl
Twin Falls
Rupert
Burley
American Falls
Massacre Rocks State Park
Chubbuck
Pocatello
Malad City
Tremonton
Brigham City
Google

duplicate

SAWTOOTH LAW
OFFICES, PLLC

ATTACHMENT

8

duplicate

Evaluation of Induced Stray Voltages from Transmission Lines using EMTP

Nagy Abed, *Senior Member, IEEE*, Sasan Salem, *Member, IEEE*, and Jim Burke, *Fellow, IEEE*

***Abstract*-- The purpose of this paper is to study the effect of transmission system parameters and operating conditions on generated stray voltage levels. . This includes the transmission line conductor configurations, line loading levels, grounding system parameters, the feeder configuration (radial or ring configuration) and unbalance loading. This enables a better way to understand how different electrical parameters impact the level of NEV and currents at points of interest during different utility operating conditions. Excessive stray voltages levels may have a negative effect on dairy farm cows and endanger personnel safety. EMTP was used to simulate the coupled electromagnetic-power circuit system. EMTP models of the poles and the line phase, neutral, and ground wire were built to represent the transmission line electromagnetic behavior and the stray voltage generation mechanism. The parameters of the proposed models were obtained from the technical literature. Different simulations were conducted by varying the system parameters and operating conditions. A discussion of these results is presented.**

Index Terms—Stray Voltage, Induction, Transmission Line, Earth, Earth Current, Ground, Step Potential, Touch Potential

I. Introduction

Stray voltage in power systems has been studied prior to the 1970's. Stray voltage is a special case of neutral-to-earth voltage (NEV); it differs from NEV because it is defined at a specific location [1]. Stray voltage in power systems has been studied prior to the 1970's. It was typically considered normal, with some issues arising from the dairy industry, pig farms owners, sensitive electronic loads and pool owner. In the case of transmission lines, however, stray voltage is normally the result of induction. Stray voltage has stirred significant public attention. The "danger" of stray voltage has been exaggerated in some articles in the press.

The reaction of animals to stray voltages varies with the amount of the voltage. Animals are more sensitive to small voltages than humans, and will react to voltages that humans cannot feel. The Wisconsin Public Service Commission defines a "level of concern" of 1 V for the cow contact voltage, which corresponds to 2 mA of current through a 500 Ω resistor [3]. The Symptoms reportedly attributed to significant levels of stray voltage include [1, 2,3]:

1. Decreased milk production of dairy cows
2. A change in the animal's behavior (e.g. Animals' reluctance to eat or drink from a feeder, erratic behavior, May not drink enough water etc)
3. Improper operation of sensitive electronic loads

Stray voltage at barns is normally measured across a 500-Ω resistor, which represents the typical resistance of a cow.

The effect of stray voltage on humans depends on their contact resistance and their body resistance (i.e. current). There are a number of references used in the industry that discuss the resistance of the human body. The body's internal resistance is about 300Ω. Resistance including the skin contact resistance is in the range of 500 to 5000 Ω [3, 8] but varies widely. Electrocution can occur for currents through the heart on the order of 60 to 100 mA; 250 mA through the heart is almost always fatal [3]. These levels of current interfere with the heart's internal electrical pacemaker and force the heart to stop beating properly. During this ventricular fibrillation, the heart muscle fibers contract erratically and unpredictably, leading quickly to death from lack of oxygen to the brain.

The following factors contribute to induced stray voltages on transmission lines:

1- Unbalanced currents in the transmission line conductors

2- Transmission line conductors configuration (pole configuration and untransposed lines)

3- Additive phase angles between the induced and load related currents in neutral system

4- Soil resistivity along the transmission line

Neutral-to-earth voltages cannot be studied using existing load-flow programs. To accurately model stray voltage, a more general steady-state circuit analysis program such as EMTP is needed. Accurate modeling involves modeling the neutral and the individual grounding electrodes [3].

This paper describes a case study involving induction related stray voltage concerns, simulation, and measurement, under different operating conditions.

II. System Modeling

This section deals with the modeling methodology utilized to simulate and measure the stray voltage. Figure 1 shows the

Nagy Abed, Sasan Salem , and Jim Burke are with Quanta Technology, ,Raleigh, NC, USA (nabed@quanta-technology.com, ssalem@quanta-technology.com, jburke@quanta-technology.com)

duplicate

978-1-4244-6551-4/10/$26.00 ©2010 IEEE

schematic diagram of the 13.8 kV transmission test system used for the study.

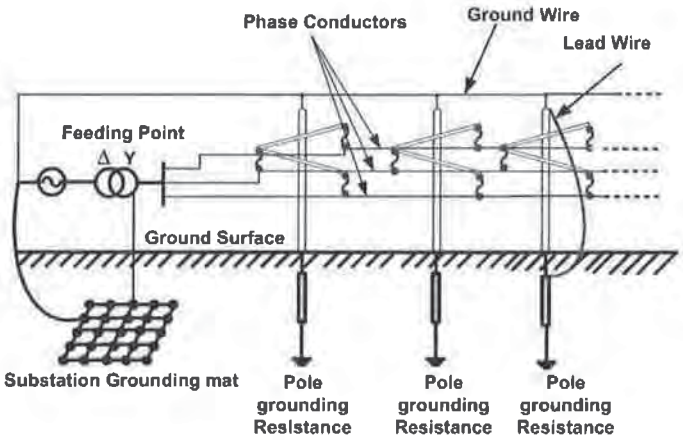

Fig. 1 Schematic Diagram of the Modeled Transmission Line System

The transmission line model utilized in the study is a distributed Constant Parameter (CP) model. The model is based on the Bergeron's traveling wave method [6]. In this model, the wave equation is solved to obtain the line operating characteristics (current, and voltage).

The transmission line parameters per unit length were obtained from geometrical and physical information (line dimensions (the distances between the conductors), height above ground, conductor and soil resistivity).

For multiphase system the wave equations are written in the matrix form:

$$\frac{d^2V}{dx^2} = Z'Y'V \tag{1}$$

$$\frac{d^2I}{dx^2} = Z'Y'I \tag{2}$$

Where:

$[Z'] = [R'] + s[L']$ Series Impedance per unit length

And $[Y'] = [G'] + s[C']$ Shunt Branch per unit length

The multiphase line is transformed into a decoupled set of modal circuits as shown in Figure 2.

With eigenvalue theory, it becomes possible to transform the above two coupled equations from phase quantities to modal decoupled quantities. The multiphase line is transformed into a decoupled set of modal circuits. The equations are then solved to obtain the transmission line terminal response.

Equations (1) and (2) are transformed into model domain

$$-\frac{d\hat{V}}{dx} = T_v^{-1} Z' T_i \hat{I} \tag{3}$$

$$-\frac{d\hat{I}}{dx} = T_i^{-1} Y' T_v \hat{V} \tag{4}$$

Where $V = T_v \hat{V}$, $I = T_i \hat{I}$ and $T_i = (T_v^t)^{-1}$

The completely decoupled equations (3) and (4) are then solved to obtain the transmission line terminal response.

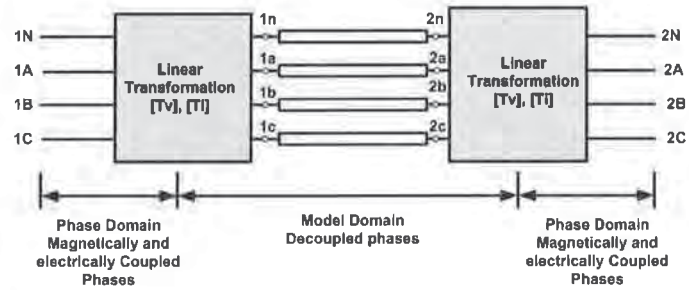

Fig. 2 The Distributed Constant Parameters Line Model

The neutral of the overhead line is often grounded at intervals along the line as required by IEEE National Electric Safety code [11]. Figure 3 illustrates two segments of three phase multigrounded line model (Carson's model).

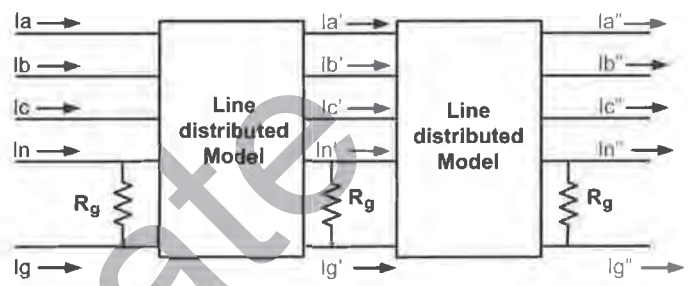

Fig. 3 Two segments of a multigrounded three phase line

In this study, a transmission system with 160 poles was modeled. The transmission line consists of untransposed three wires with a static wire. The transmission line is grounded every four poles. Appropriate data was obtained to model poles, lines, shield wires, ground rods, and the substation grounding.

Unbalanced currents on transmission lines, caused by unbalanced load and/or un-transposed lines induce a voltage on parallel lines including ground wires, communication lines, and other transmission or distribution wires. The study was conducted for balanced and unbalanced loading and with uniform pole configuration. The induced voltages are considered to be steady state and 60 Hz so; they manifest similar characteristics to "stray voltage".

III. Simulations and Results

A transmission system with 160 poles was modeled to determine the impact of various system parameters on the generated stray voltage level. For this purpose the following system parameters were studied:

- Equivalent of substation grounding mat resistance
- Line loading
- Pole ground rod resistance
- Line Span length
- Unbalanced line loading
- The transmission line boundary conditions (i.e. radial or dual supply)

a. Impact of Substation Grounding Resistance on the Generated Stray Voltage

The effect of substation grounding on the stray voltage

duplicate

levels is first examined using five substation grounding resistance: 0.1, 0.25, 0.5, 0.75 and 1 Ω respectively. A series of cases were conducted in which the substation ground resistance was changed and stray voltage levels were recorded for both radial and dual supply feeder.

Figure 4 shows the generated stray voltage in volt that result from these cases for dual supply feeder. From the results, it can be seen that the change in the substation resistance from 0.1 ohms to 1.0 Ohm will increase the measured stray voltage levels significantly. It is of interest that there is a significant difference between 0.1Ω and 0.5Ω, but above 0.75Ω, changes in the substation grounding resistance have less effect on the generated stray voltage levels.

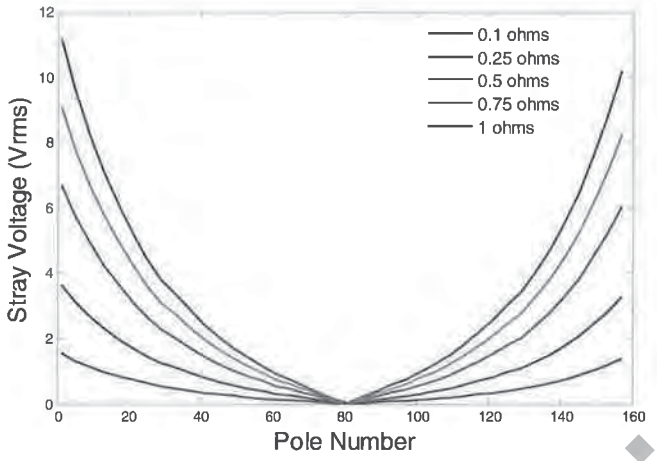

Fig. 4 Impact of Substation Grounding on SV level for dual supply feeder

Most substation grounds are generally assumed to be on the order of 1 ohm (or higher in distribution substations). The stray voltage rises particularly on the poles in the vicinity of the substation, which is consistent with the results of other papers on this topic.

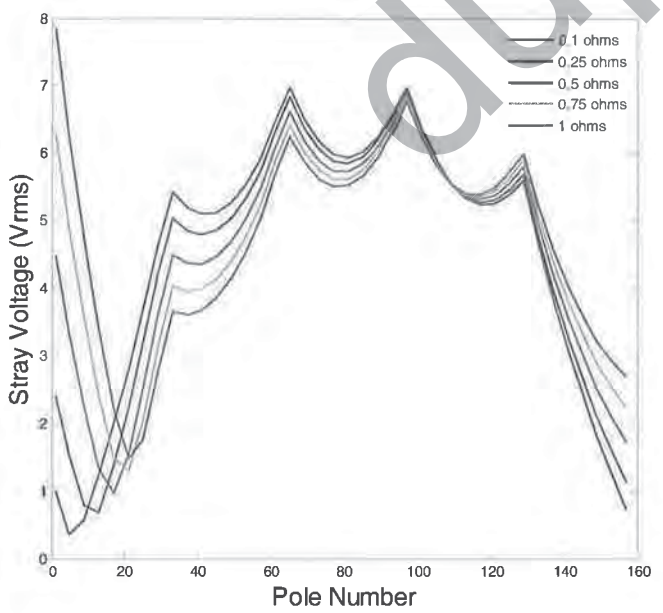

Fig. 5 Impact of Substation Grounding on SV level for radial feeder

Figure 5 shows the generated stray voltage for different substation grounding values for radial feeder. By increasing the substation resistance from 0.1 ohms to 1.0 Ohm the stray voltage will increase significantly at both terminal of the line while the values between the two terminals varies differently from the two way feed feeder case. The results show that there is a significant difference between 0.25Ω and 0.5Ω, but above 0.75Ω, changes in the substation grounding resistance have less effect on the generated stray voltage levels.

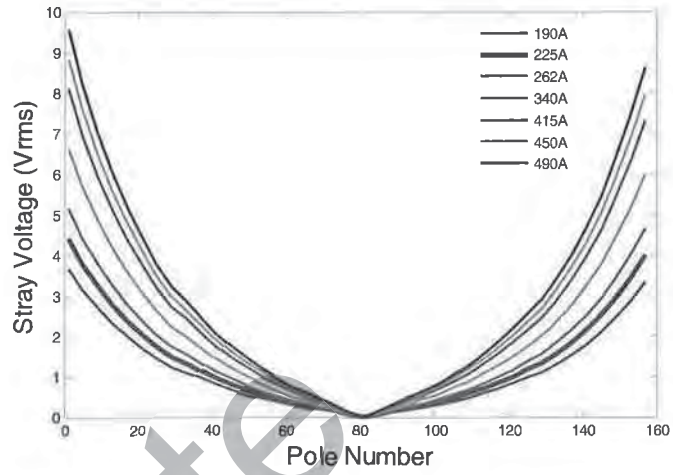

Fig. 6 Impact of Line loading on the Generated SV Level for dual supply feeder

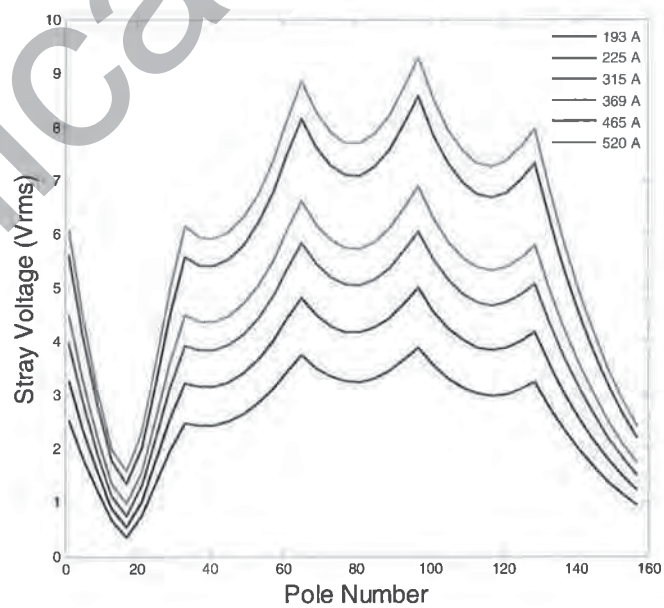

Fig. 7 Impact of Line loading on the Generated SV Level for radial feeder

b. Impact of Line Loading on the Generated Stray Voltage

To examine the effect of transmission line current loading on the generated stray voltage levels, different loading cases were simulated and the generated stray voltage levels were measured.

Figure 6 and 7 shows the stray voltage levels for various line currents for dual supply feeder and radial feeder respectively. As was expected, higher line currents induce higher voltages in the shield wire and the stray voltages will increase accordingly.

duplicate

c. *Impact of Pole Grounding Resistance on the Generated Stray Voltage*

In this part of the study, the pole grounding resistance is varied between 5-200 ohms to study the relationship between the induced stray voltage levels and the pole grounding. These range represent typical high and low pole grounding resistance.

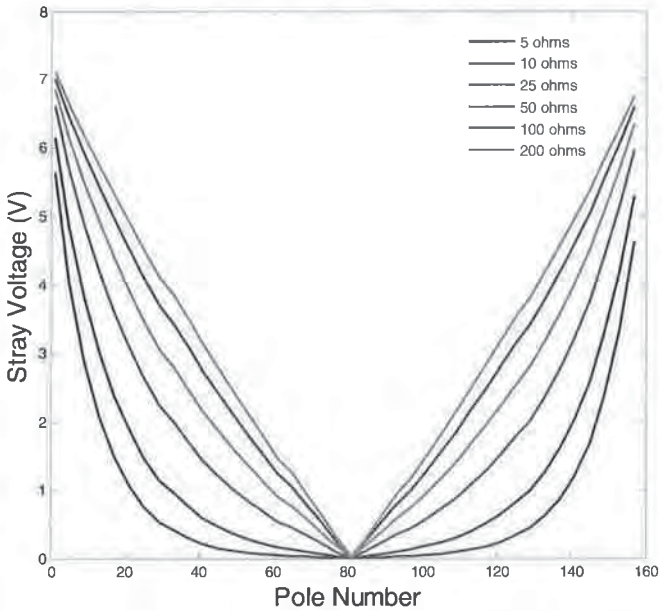

Fig. 8 Impact of Pole Grounding Resistance on the SV Level on dual supply feeder

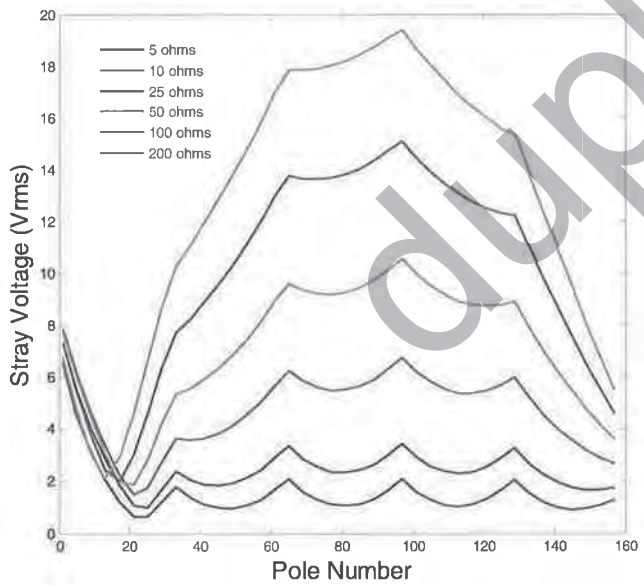

Fig. 9 Impact of Pole Grounding Resistance on the SV Level on radial feeder

The impact of pole ground rod resistance on stray voltage is shown in Figure 8 for dual supply feeder. The simulation results demonstrate that there is a significant difference between 5Ω, 10Ω and 25Ω, but above 50Ω, changes in the pole grounding resistance have less effect on the generated stray voltage levels. In many areas, it is very difficult to drive ground rods to attain values less than 50 ohms, so the impact of grounding, to reduce stray voltage, might be considered minimal for most transmission lines.

The impact of pole ground rod resistance on stray voltage is shown in Figure 9 for radial feeder. The simulation results demonstrate that there is a significant difference for pole grounding resistance values above 25Ω, but below 10Ω, changes in the pole grounding resistance have less effect on the generated stray voltage levels.

d. *Impact of Line Span on the generated Stray Voltage*

In order to evaluate the line span effect on the generated stray voltage, a series of simulations was conducted in which the line span was changed. The line span was changed between three values: 40, 50, and 60 meters respectively. Figure 10, and Figure 11 shows the impact of the line span length on the stray voltage for dual supply feeder and radial feeder respectively. The simulation results demonstrated the line span length has a little impact on the stray voltage level.

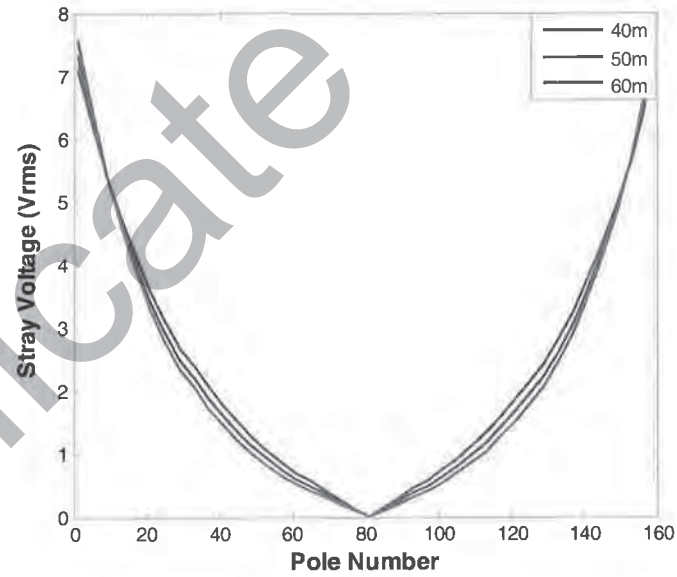

Fig. 10 Impact of Line Span on the SV Level on dual supply feeder

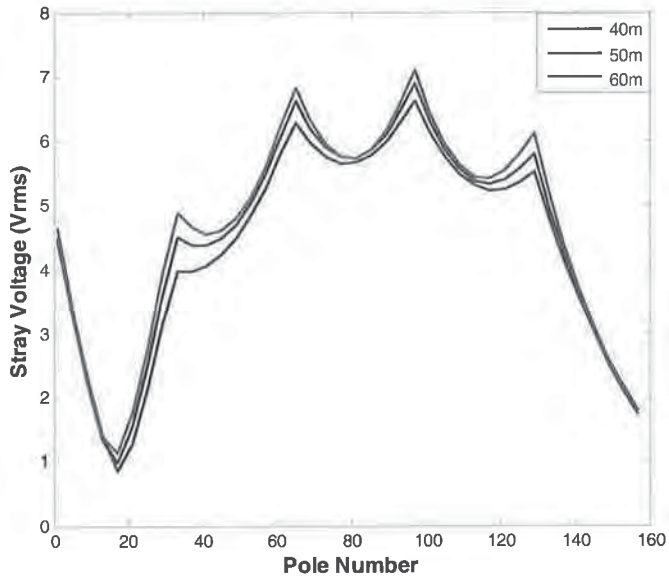

Fig. 11 Impact of Line Span on the SV Level on radial feeder

duplicate

e. Impact of load unbalanced on the Stray Voltage

To evaluate the impact of unbalanced loading on the stray voltage the transmission line loading was changed to create currents unbalance one of the phases. The loading unbalance was varied between 2% to 20%.

Figure 12 shows the stray voltage levels results for different unbalance loading for dual supply feeder. The results show that stray voltage increases with the increase in the unbalance (the zero sequence current).

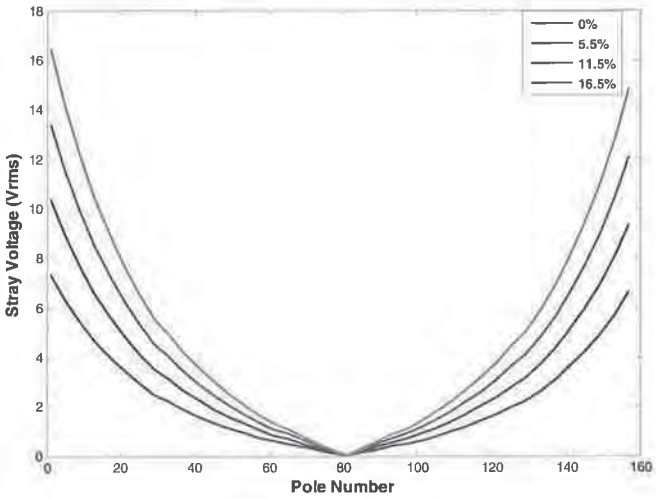

Fig. 12 Impact of unbalance loading on the SV Level on dual supply feeder

Figure 13 shows the stray voltage levels results for different unbalance loading for radial feeder. The results show that the stray voltage increases with the increase in the unbalance in the system.

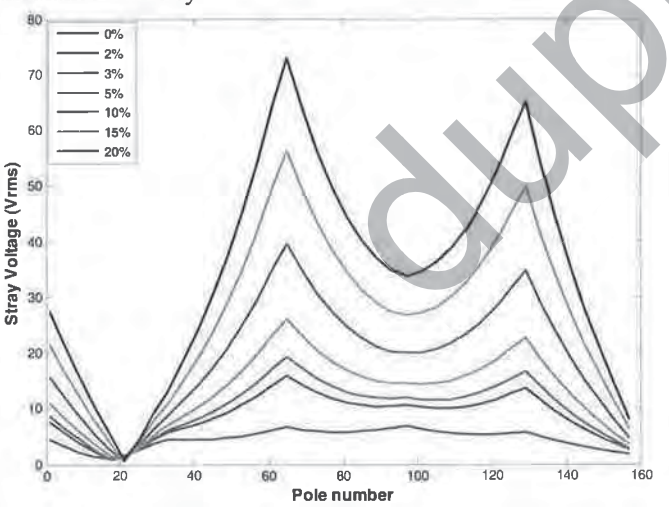

Fig. 13 Impact of unbalance loading on the SV Level on radial feeder

IV. CONCLUSIONS

An EMTP based methodology was developed for simulation and analysis of stray voltage (SV) and neutral-to-earth voltage (NEV) levels as well as the neutral currents along the transmission system under several types of system conditions, or grounding. This enables a better way to understand how different electrical parameters impact the level of SV and currents at points of interest during different utility operating conditions.

Transmission lines induce stray voltage levels for virtually all voltages and configurations. Also, transmission lines will usually cause stray voltage that, measured with a voltmeter, may exceed the threshold limits of regulatory bodies. The effect of the stray voltage on humans and animals is highly affected by the surrounding condition (earth resistivity, contact resistance, etc).

Finally, the main conclusions for this analysis are:

- Substation grounding has a significant impact on SV levels
- Line loading plays a significant role in SV levels
- Unbalanced transmission line current loading increases the stray voltage levels.
- Line Span length does not have much impact on the SV.
- The stray voltage profile depends on the transmission line boundary conditions.

V. REFERENCES

[1] A.M. Lefcourt, "Effects of Electrical Voltage/Current on Farm Animals: How To Detect and Remedy Problems," U.S. Department of Agriculture, Agriculture Handbook No. 696, 1991.

[2] J. Burke, "The Confusion Surrounding Stray Voltage", 2007 IEEE Rural Electric Power Conference, P. C1-C5.

[3] T.A. Short, "Electric Power Distribution Handbook", CRC press, 2004

[4] E. R. Collins, and J. Jiang, "Analysis of Elevated Neutral-to-Earth Voltage in Distribution Systems With Harmonic Distortion" IEEE Transaction on power delivery, Vol. 24, No.3, July 2009

[5] D. J. Ward, J. F. Buch, T.M. Kulas, and W. J. Ros, "An Analysis of the Five-Wire distribution system" IEEE Transaction on power delivery, Vol. 18, No.1 Jan 2003

[6] T. C. Surbrook, N. D. Reese, A. M. Kehrle," Stray Voltage: Sources and Solutions", IEEE Transactions on Industry Applications, Vol. IA-22, No. 2, March 1983.

[7] M. E. Galey, "Benefits of performing unbalanced voltage calculations," IEEE Transactions on Industry Applications, Vol. IA-24, No. 1, Jan-Feb 1988, pp. 15-24.

[8] J. Burke, *Power Distribution Engineering: Fundamentals and Applications*, Marcel Dekker, INC., 1994.

[9] J. Burke, C. Untiedt, "Stray Voltage: Two Different Perspectives" – IEEE REPC 2008

[10] IEEE Std. 80-2000, IEEE Guide for Safety in AC Substation Grounding.

[11] IEEE Std. C2-2007 The National Electrical Safety Code,2006

Nagy Abed (M'07-SM'09). He received his B.Sc. and M.Sc. degrees from Mansoura University, Egypt, and his PhD from Florida International University, Miami. His research interests include power system modeling, fault diagnosis, power quality, FACTS devices, Application of Finite Element in power system and real time control with HIL. He published more than 43 articles and technical papers in refereed Journals and Conference Proceedings.

Sasan Salem is a Principal Engineer with Quanta Technology. He received his BS in Electrical Power Engineering form Iran university of Science and Technology and his M.Sc. from Concordia University in Montreal. His main research interests include power system analysis and control and FACTS applications in power systems.

Jim Burke is an Executive Advisor with Quanta Technology. He has been in the industry over 43 years. He is the former chair of the IEEE Distribution Subcommittee as well as the Working Group on Distribution Neutral Grounding. He is a Fellow of the IEEE

duplicate

SAWTOOTH LAW
OFFICES, PLLC

ATTACHMENT

9

duplicate

Induced Stray Voltages from Transmission Lines

Shashi Patel, *Senior Member, IEEE and* Frank C. Lambert, *Senior Member, IEEE*

Abstract— **Stray voltages are inherent in four-wire multigrounded distribution systems. At the customer's premise, these voltages result from the interaction of multiple parameters of the primary and secondary neutral systems. The causes of stray voltages typically include large unbalanced loads in the neutral system, high neutral impedance, and lack of equipotential grounding at the customer's premise. Non-conventional sources of stray voltages may also exist. These sources may consist of large triplen harmonic currents on the neutral system or induction from a nearby transmission line. This paper describes a case study involving induced stray voltages on a single phase distribution line running parallel with a 500 kV transmission line.**

Index Terms—**stray voltage, induction, transmission line**

I. Introduction

It is not uncommon for a distribution line to co-exist with a transmission line, either on the same right-of-way or as an underbuilt circuit. For such distribution lines, high neutral to earth voltages (N-E voltages) due to induction are always a concern. Underbuilt distribution lines are subject to higher NEVs due to close proximity of the transmission line.

The following factors contribute to induced stray voltages on a distribution line:

- Currents in the transmission line conductors
- Proximity of the distribution line to the transmission line
- Length of the parallel section
- Additive phase angle between the induced and load related currents in the neutral system
- Soil resistivity along the parallel section

This paper describes a case study involving induction related stray voltage concern, measurement, analysis, and mitigation.

II. Concern

This project investigated stray voltage concerns caused by a 500 kV transmission line. The transmission line parallels a one mile section of a 13 kV distribution feeder and is believed to be the primary source for the stray voltage. When the problem was first detected, approximately 18 volts was measured at a customer's spigot. At the time of the investigation, the customer and his daughter each owned a house at the southern end of the parallel section.

Initially, the utility company carried out several investigations and applied various mitigation means on the feeder and at the customers' houses. The most effective mitigation means was the installation of surge arresters between the primary and secondary neutrals at the two houses. Although the stray voltage problem was effectively mitigated, concerns for other customers along the parallel section remained. Future expansion in the area was another reason why the utility company owning the distribution system wanted stray voltage mitigation for the entire tap.

III. Scope

The project scope included measuring stray voltage and related parameters, identifying various stray voltage sources, and finally recommending mitigation means that could be effectively applied. A computer program was used to model the transmission and distribution systems. NEETRAC validated the computer model first by comparing the analyzed data with the measured data. In the next step, source identification and mitigation analysis were performed. Based on this analysis, NEETRAC made recommendations for effective mitigation of stray voltages along the parallel section.

IV. Identification of Stray Voltage Sources

The first set of measurements consisted of identifying stray voltage sources such as a corroded neutral or a low voltage, high impedance fault in the area. The measured data showed that these sources were not present in and around the customer houses. The next set of tests focused on measuring stray voltages due to induction from the 500 kV transmission line and those due to the load current in the neutral. NEETRAC's measurements and the prior measurements performed by the utility company identified these two sources as the main contributors for the stray voltage problem on the tap line.

Prior to NEETRAC's involvement, the utility company had measured the stray voltages with the transmission line energized and de-energized. These measurements indicated that the induction from the 500 kV transmission line contributed approximately 73% and the load current in the neutral contributed the rest. The computer study provided more insight into the nature of these two stray voltage sources

Manuscript received April 11, 2005. This work was supported by the Georgia Transmission Corporation. S. G. Patel (e-mail: Shashi.Patel@neetrac.gatech.edu) Frank C. Lambert (e-mail: Frank.Lambert@neetrac.gatech.edu) and are with the National Electric Energy Testing Research and Applications Center (NEETRAC) who performed the subject work. NEETRAC is a Center of The Georgia Institute of Technology.

duplicate

0-7803-9193-4/06/$20.00 ©2006 IEEE.

and also helped understand the relationship between them. Understanding this relationship aided NEETRAC in recommending appropriate mitigation means.

Figure 1 shows the computer model used for the analysis. A total of five different operation scenarios, as listed below, were studied:

1. 500 kV line opened at TSub-A only *
2. 500 kV line opened at TSub-B only *
3. 500 kV line opened at both substations *
4. Distribution line de-energized with the 500 kV line carrying full load
5. Distribution and 500 kV lines carrying full load (Base Case)

* Distribution line de-energized

Figure 1 also shows the neutral currents and N-E voltages at key locations for the five scenarios described above. Comparing the base case data (Scenario 5) with the data for other operating scenarios helped determine the contributions made by various stray voltage sources.

The data in Figure 1 indicates that the N-E voltages along the tap line are almost entirely dictated by the load flow in the 500 kV transmission line. The phase angle difference between the voltage caused by the induction and that caused by the distribution loads is such that the latter source has virtually no influence in the net N-E voltage at the customer's premise. For example, the "base case" N-E voltage at the customer's premise is 14.3 volts. This N-E voltage includes the contribution made by various loads on the distribution system. When the entire distribution system is de-energized, the N-E voltage at the customer's premise remains almost the same, 14.5 volts.

V. MITIGATION

The next step consisted of evaluating several mitigation means for their effectiveness in reducing the stray voltage at the customer's premise. In each case, the mitigation effectiveness was determined by comparing the corresponding stray voltage with that for the "base case".

The following mitigation methods were evaluated:

1. Isolating the primary neutral from the secondary neutral at the customer's transformer.
2. Moving the distribution tap line 2,500 feet from the transmission line.
3. Installing a 5 Ω ground well at each pole along the distribution tap line.
4. Bringing an additional two phases to the customer's transformer and balancing the load.
5. Installing a continuous counterpoise, 2/0 copper conductor, along the distribution tap line and connecting to the downlead at each pole.
6. Installing primary isolation transformers along the distribution tap line.

With the exception of Mitigation #5 (continuous counterpoise along the distribution tap line), all of the mitigation means were evaluated with the computer model. Because the software used for this investigation is not capable of modeling a continuous counterpoise in a mutually coupled system, this evaluation consisted of installing the counterpoise along the tap line and measuring the N-E voltages.

<u>Mitigation Methods 1 through 4 (Neutral Isolation, Tap Relocation, 5 Ω Pole Ground, and Three Phase Tap Line)</u>

For an individual customer, the most effective mitigation means is isolation of the primary neutral from the secondary neutral at the customer's transformer. The utility company had initially installed neutral isolators at the customer's transformers. During maximum loading conditions, the voltages across the blockers were exceeding their ratings, thereby rendering them ineffective. The blockers were then replaced with 3 kV surge arresters.

Following installation of surge arresters, stray voltages at the houses reduced to extremely low values. The computer data also showed that the "base case" N-E voltage at the customer's premise reduced from 14.3 volts to 0.01 volts. However, the N-E voltage on the primary side increased from 14.3 volts to 15.7 volts. This voltage appears at the neighboring houses which are not protected with neutral isolators. In general, the increase in the N-E voltage on the primary side following the neutral isolation is in inverse proportion to the resistance of the grounding system at the customer's house.

Minimizing induction from the transmission line as a mitigation means was also studied. One approach to reduce induction is to move the distribution tap line away from the 500 kV transmission line. In addition to increasing the separation distance between parallel line sections, the effectiveness of this mitigation method also depends on the soil resistivity values in the area. The soil resistivity along the distribution tap line, as determined in the past investigations, is extremely high. As a result, it was anticipated that the tap line would have to be relocated a significant distance from its present location for the desired reduction in induced voltage.

The computer analysis indicated that the distribution tap line would have to be relocated approximately 2,500 feet from the 500 kV transmission line to reduce the "base case" N-E voltage at the customer's premise by 40%. In addition to the cost, this solution was also impractical to implement due to its adverse effects on the customers that are presently served by the distribution tap line.

Installing a low resistance ground at each pole along the entire length of the distribution tap line was also analyzed. The computer study indicated that installing a ground well with approximately 5Ω resistance at each pole could reduce the customer's N-E voltage by 40%.

duplicate

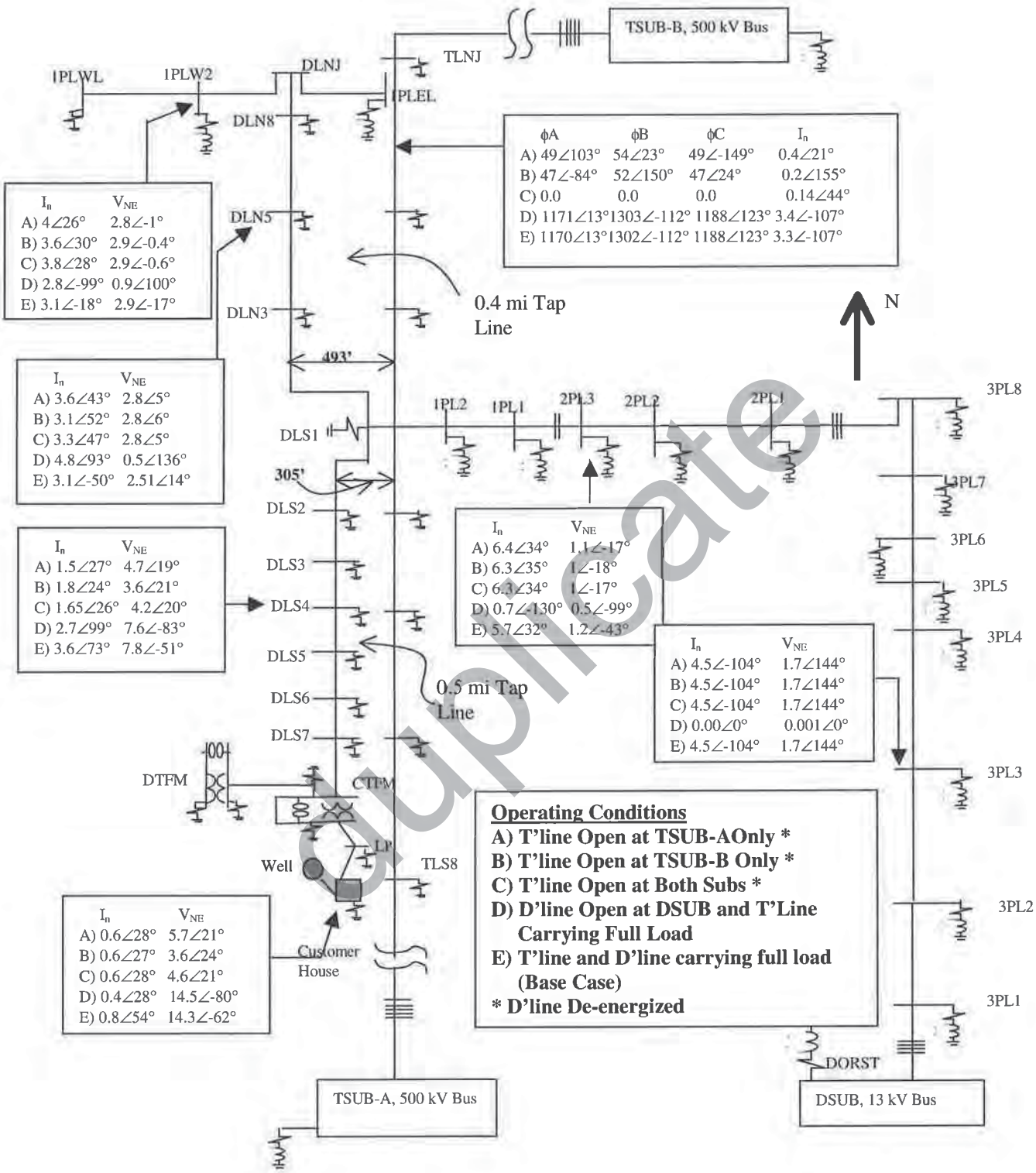

duplicate

Figure 1: Distribution System Neutral Currents and N-E Voltages due to Various System Operating Conditions - Source Identification

Drilling eight ground wells, one at each pole, is an expensive solution. Also, there is no guarantee that the goal of achieving 5Ω resistance at each pole can be met in high resistivity, sandy soil.

Since the distribution load provides only a small contribution to the stray voltage problem, bringing in an additional two phases to the customer's transformer and balancing the load was not expected to offer much improvement. The computer analysis confirmed this conclusion. The N-E voltage at the customer's premise actually increased from 14.3 volts to 16.3 volts when the entire distribution tap line was modeled as a three phase line with nearly equal loads on each phase.

Mitigation Method 5 (Continuous Counterpoise)

Although installing 3 kV surge arresters effectively solved the stray voltage problem, the utility company had concern regarding future load growth, particularly in the area beyond the customer's house. This and safety related concerns for using 3 kV surge arresters for isolation prompted the utility company to look for mitigation means that could reduce the influence of induced voltage and current along the distribution tap line. In response to this need, NEETRAC recommended installation of a continuous counterpoise (2/0 bare copper conductor) along the distribution tap line. Due to modeling limitations, the effectiveness of this solution could not be evaluated.

The utility company installed the continuous counterpoise from the customer's transformer (CTFM) to the pole at DSL for evaluation (Figure 1). This counterpoise was connected to the downlead at each pole along the tap. Additional ground rods were also installed and connected to the counterpoise at each pole. The voltage measurements obtained at the customer's transformer following the installation of the counterpoise showed no improvement. The utility personnel measured 15.5 volts from the transformer ground to a remote probe and 16.5 volts across the surge arrester providing the neutral isolation.

Mitigation Method 6 (Isolation Transformers along the Distribution Tap Line)

The induced voltage is directly proportional to the length of the parallel lines. In the present case, approximately one mile of single phase distribution tap line parallels the 500 kV transmission line. Breaking up the total length of the parallel section into one or more smaller sections should reduce the induced voltage on each section. This mitigation method was analyzed using the computer model. A field installation including the measurements followed this computer analysis. Figure 2 shows the neutral currents and N-E voltages at some key locations for four different combinations of isolation transformers and their locations between the customer transformer and the tap point (DSL1). Note that the mitigation effectiveness of each transformer / location combination can be determined by comparing the corresponding N-E voltage with the "base case" N-E voltage.

Referring to Figure 2, the isolation transformer at DLS5 reduces the N-E voltage at the customer transformer significantly. However, N-E voltages increase between DLS5 and DLS1. Placing an additional transformer at DLS1 reduces these N-E voltages.

NEETRAC and the utility company involved felt that field tests should be performed to validate the effectiveness of isolation transformers as indicated in Figure 2. Since isolation transformers for primary system applications are not routinely manufactured, obtaining such a transformer with short notice was difficult. The field tests, as a result, were performed by installing two 7.6kV/240-120V, 50 kVA transformers connected back-to-back. The transformers were mounted on a wood pole at DLS1.

Table 1 shows the N-E voltages measured at the customer's transformer, both with and without the isolation transformers connected at DLS1. For comparison, the table also shows the computed data.

Referring to Table 1, isolation transformers located at DLS1 reduce the N-E voltage between the customer's primary pole ground to a remote probe from 14.7 volts to 5.3 volts, a 64% reduction. A similar reduction was recorded in the N-E voltage across the secondary neutral isolator (3 kV surge arrester) at the customer's transformer.

For an isolation transformer to be effective, the telephone or cable TV shield wires must not be continuous across the transformer. Table 1 shows that the computed data are in good agreement with the measured data once the telephone shield wires were isolated across the transformers.

Table 1 Validation of Isolation Transformer Effectiveness – Two 7.6kV/120-240V Transformers Installed Back-to-Back at DLS1 (Figure 2)

Test Scenario	Measured V_{NE} (Volts)	Computed V_{NE} (Volts)
No isolation transformer (Base case)	14.7	14.3 ∠-62°
Primary isolation transformer at DLS1, telephone shield across isolation transformer continuous	8.4	Not calculated
Primary isolation transformer at DLS1, telephone shield across isolation transformer isolated	5.3	5.5 ∠-67°

duplicate

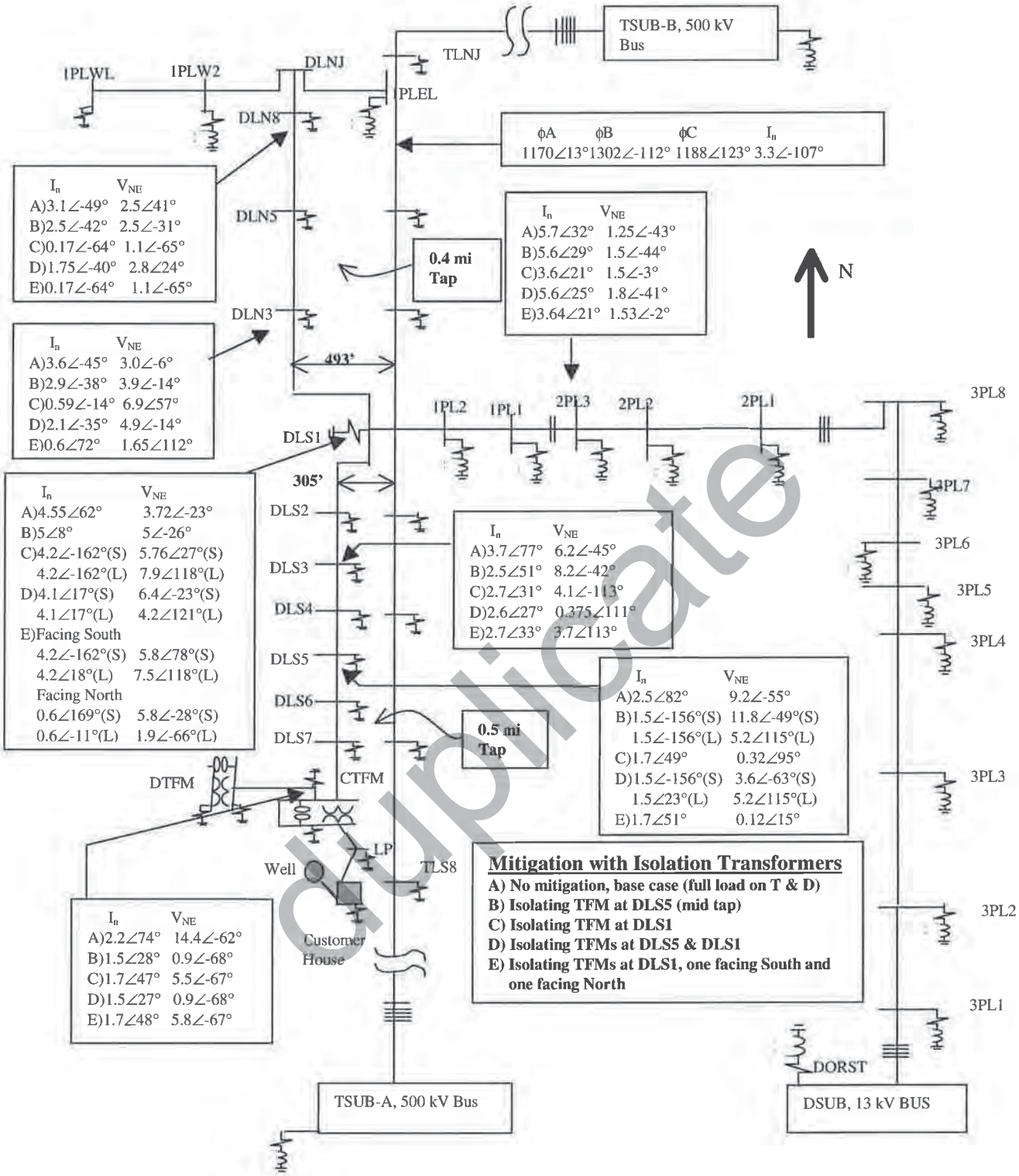

duplicate

Figure 2: Distribution System Neutral Currents and N-E Voltages –
Effectiveness of Isolation Transformers in Reducing Stray Voltages along the Primary

VI. Conclusions

There are several conclusions that resulted from the analysis of induced stray voltages and mitigation means performed in this project. The following is a summary of these conclusions:

1) Compared to stray voltages resulting from an unbalanced load in the neutral, stray voltages due to induction can be significantly higher. In such a case, many of the traditional mitigation means (balanced load on three phase circuit, lowering ground resistance, increasing neutral conductor size, etc.) will not be effective.
2) The induced stray voltage problem may exist at several houses along the parallel section of the distribution line. Installing neutral isolators at these houses will solve individual stray voltage problems but will significantly increase N-E voltages at unprotected houses.
3) Installation of one or more isolation transformers along the parallel section breaks up large loops formed between the phase conductors, neutral conductor and ground into smaller loops. This, in turn, reduces the N-E voltages along the parallel section.
4) To insure the maximum effectiveness, cable and telephone grounding circuits must be isolated across the isolation transformers.

References

1) William Dick, David Winter, *Computations, Measurement and Mitigation of Neutral-to-Earth Potentials on Electrical Distribution Systems*, IEEE Transaction on Power Delivery, Vol. PWRD-2, No.2, April 1987.

2) James Donald, Claude M. Hertz, Ivan Winsett, *Results of Initial Field Installations of Magnetic Saturation Blockers for Minimization of Stray Voltage on Dairy Farms*, American Society of Agricultural Engineers, Paper No. 156-170, February 1984.

3) C. F. Dalziel, W. R. Lee, *Electric Shock Hazard,* IEEE Spectrum, Vol. 6, No.2, February 1969.

4) EPRI TR-113566, *Identifying, Diagnosing, and Resolving Residential Shocking Incidents*, Final Report, September 1999.

5) EPRI TR-106661-V1, *Distribution Grounding – Volume 1: Handbook*, Project 3066-01, Final Report, August 1996.

6) USDA Agriculture Handbook 696, *Effects of Electrical Voltage/Current on Farm Animals (How to Detect and Remedy Problems)*, December 1991.

Biography

Shashi Patel (Senior Member) was born in the Fiji Islands and grew up in India. He received a BS (EE) degree from India and MS (EE) degree from the Georgia Institute of Technology in 1976. He worked for a state owned utility company in India from 1965 to 1967 and started his career in the U.S.A. with Bonneville Power Administration, Portland, Oregon in 1969. Georgia Power Company employed him in 1970. Shashi retired from Georgia Power Company in 1995. Since that time, he has worked as a Senior Research Engineer at NEETRAC, a Center of Georgia Tech. Throughout his professional career, he has been involved in special projects covering a wide variety of areas, including power system studies, lightning and fault vulnerability investigations, high voltage testing, power system grounding, stray voltage investigations and underground corrosion.

Frank C. Lambert (Senior Member) received BEE and MSEE degrees from the Georgia Institute of Technology in 1973 and 1976, respectively. Before joining NEETRAC, Mr. Lambert was employed for twenty-two years at Georgia Power Company where his responsibilities included research, distribution automation, network underground, distribution and transmission system design, construction, operation, maintenance, and evaluation. He is currently Program Manager for Electrical Systems at NEETRAC, a Center of Georgia Tech, where his responsibilities include research and development projects related to power quality, grounding, power electronics, distributed generation, power systems analysis, and high voltage and high current testing.

duplicate

SAWTOOTH LAW
OFFICES, PLLC

ATTACHMENT

10

duplicate

National Electric Energy Testing, Research & Applications Center

NETRAC

A Research Center of the Georgia Institute of Technology

Induced Stray Voltages from Transmission Lines

Shashi Patel
Frank Lambert

duplicate

Introduction

- Conventional stray voltage sources include unbalanced loads, neutral impedances, and high earth voltage gradients.
- Non-conventional sources include triplen harmonic neutral currents and induction from nearby transmission lines.

duplicate

Induced Stray Voltages - Parameters

- Currents in transmission lines
- Proximity to distribution line
- Length of parallel section
- Additive phase angle between induced and load currents in the grounded neutral system
- Soil resistivity

duplicate

Concern

- Stray voltage on a single phase tap line (7.2 kV) caused by a 500 kV transmission line
- Parallel section – Approximately 1 mile
- Average Distribution Pole Spacing – Approximately 350'
- Approximately 14 volts at the faucet of a customer at the end of the tap line

duplicate

Project Scope

- NEETRAC and prior measurements
- Identification of various sources
- Computer modeling and validation with the measured data
- Performing studies to evaluate effectiveness of various stray voltage mitigation methods

duplicate

Measurements by NEETRAC

duplicate

- First set of measurements involved identifying house wiring, secondary neutral and buried 120/240 volt service related sources, if any. None was found.
- Second set of measurements included primary profiling from the substation to the customer – phase/neutral currents, NEVs and pole ground resistances

Prior Measurements

- Prior to NEETRAC's involvement, the utility company measured stray voltages at the customer's faucet both with and without energizing the transmission line.
- The measurements indicated that the transmission line contributed approximately 73% of the total stray voltage. The remainder was produced by the load current.

duplicate

Computer Modeling

- Modeled the subject feeder from the substation to the customer including the parallel transmission line.
- Validated the model by comparing the results with the measured data.
- Identified the sources by simulating various operating conditions.

duplicate

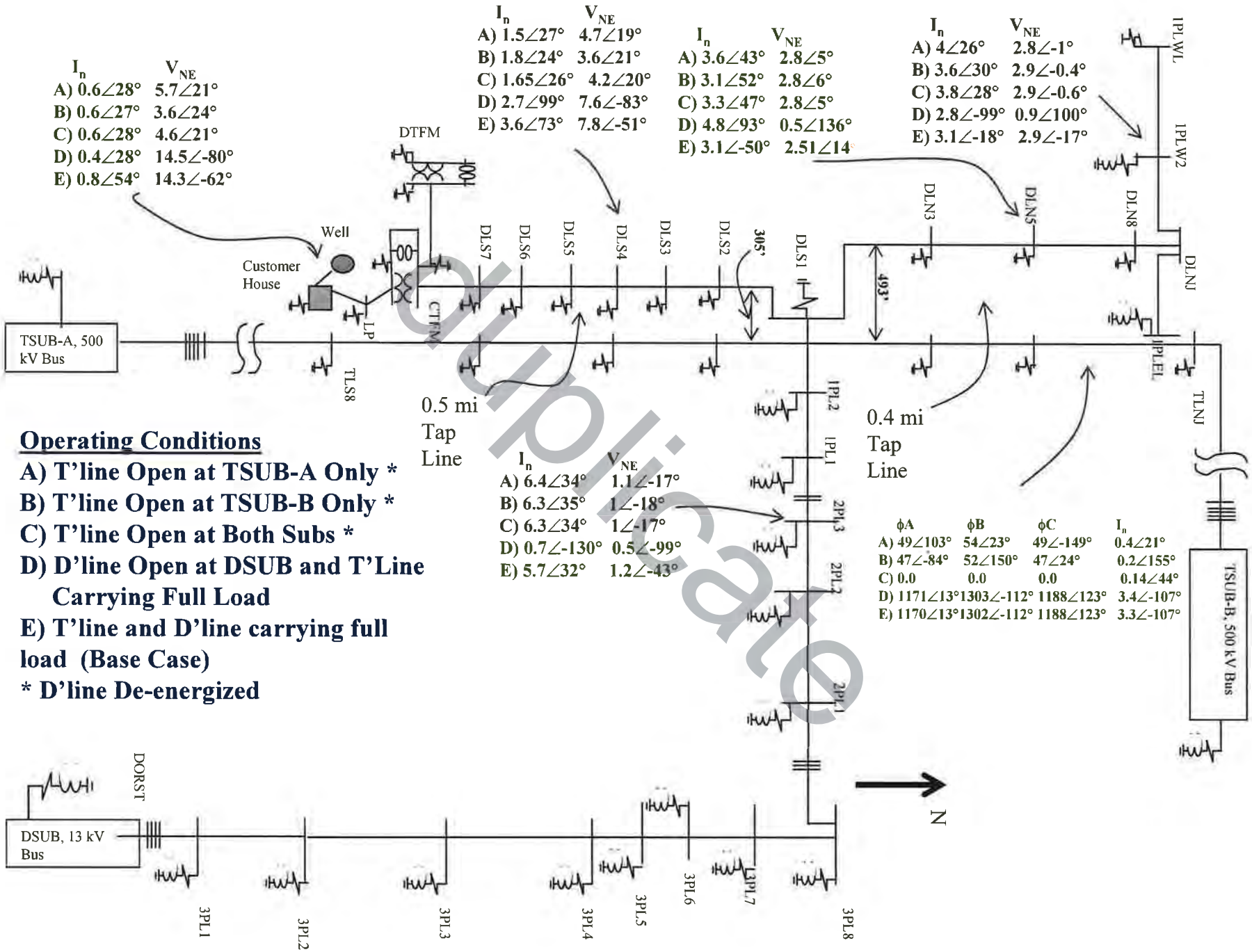

Operating Conditions

A) T'line Open at TSUB-A Only *
B) T'line Open at TSUB-B Only *
C) T'line Open at Both Subs *
D) D'line Open at DSUB and T'Line Carrying Full Load
E) T'line and D'line carrying full load (Base Case)
* D'line De-energized

duplicate

Evaluation of Mitigation Methods

duplicate

Install neutral isolators

- Initially, blocker ratings will be exceeded during high loading conditions.
- Replaced with 3 kV surge arrester with reduction in stray voltage from 14.3 volts to 0.01 volts.
- The primary NEV increased from 14.3 volts to 15.7 volts.

Evaluation of Mitigation Methods

duplicate

Move the tap line away

- The tap line would have to be relocated approximately 2,500' from the transmission line to reduce the stray voltage by 40%. This result is partly due to extremely high soil resistivity in the area.
- Besides the cost, this solution was impractical for existing customers.

Evaluation of Mitigation Methods

duplicate

Install 5 Ohms ground well at each pole

- Study showed that the stray voltages can be reduced by 40%.
- Drilling a ground well at eight locations is expensive.
- There is no guarantee that the resistance will be reduced to 5 Ohms.

Evaluation of Mitigation Methods

duplicate

Convert the tap to a three phase line and balance the load.

- **The NEV at the customer's transformer pole increased from 14.3 volts to 16.3 volts.**

Evaluation of Mitigation Methods

duplicate

Install isolation transformers on the tap line

- Breaks the length of the parallel section
- Effective solution for the entire tap
- Cable TV or telephone shields across the isolation transformers must be isolated to increase mitigation effectiveness.
- Proper fuse coordination is required.

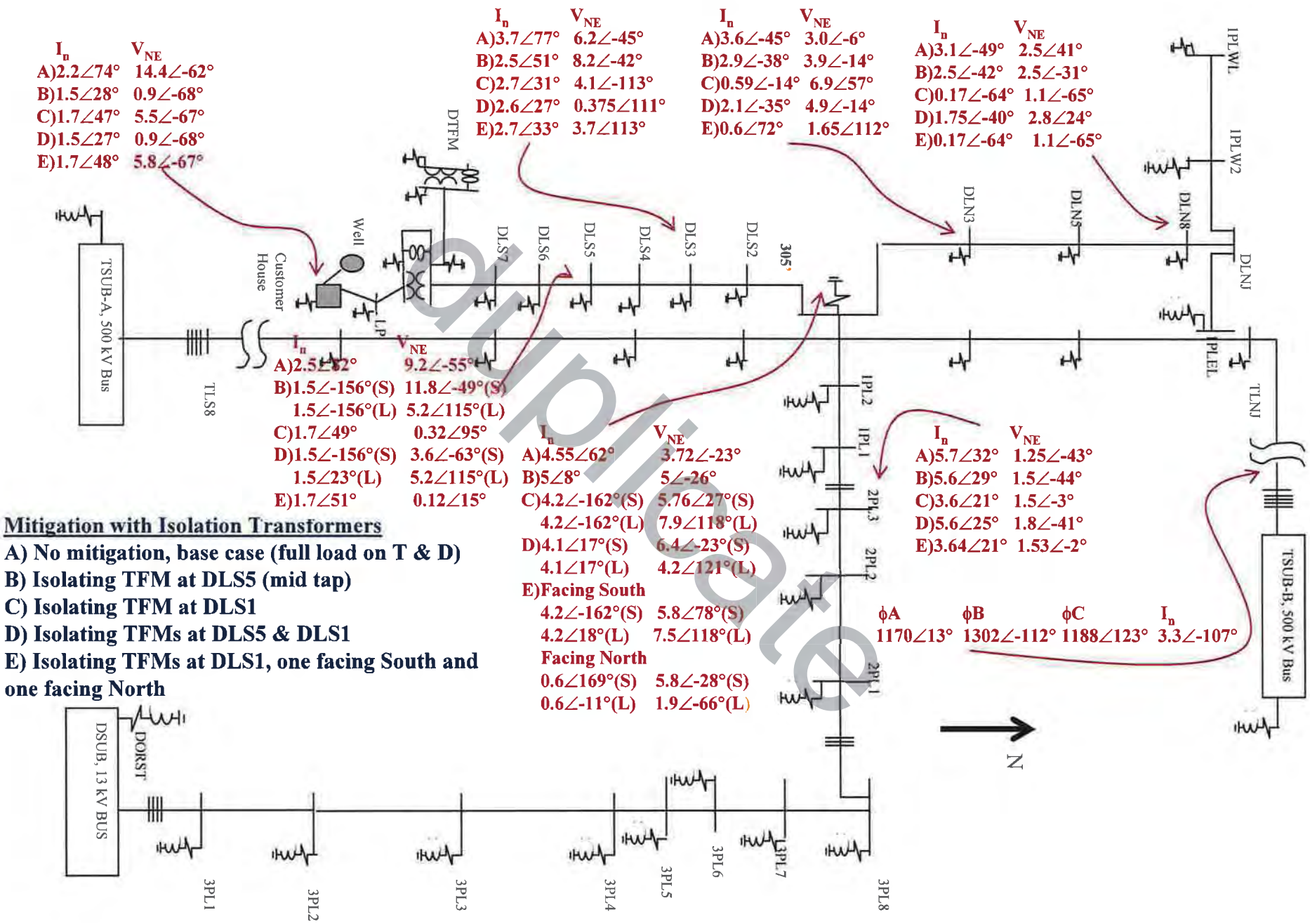

Mitigation with Isolation Transformers

A) No mitigation, base case (full load on T & D)
B) Isolating TFM at DLS5 (mid tap)
C) Isolating TFM at DLS1
D) Isolating TFMs at DLS5 & DLS1
E) Isolating TFMs at DLS1, one facing South and one facing North

duplicate

Conclusions

- Stray voltages due to induction can be significantly higher compared to those due to load currents.
- Stray voltages due to induction are typically spread along the parallel section serving several customers.
- Most of the traditional mitigation means will not be effective.

duplicate

Conclusions

- Installation of one or more isolation transformers along the parallel section is an effective solution for the customers served by the tap.
- For effective mitigation, Cable TV and telephone shields must be isolated across the isolation transformers.

duplicate

Mailing Address
P.O. Box 7985
Boise, Idaho 83707

Boise Office
Golden Eagle Building
1101 W. River St., Ste. 110
Boise, Idaho 83702
Tel. (208) 629-7447
Fax (208) 629-7559

Challis Office
1301 E. Main Ave.
P.O. Box 36
Challis, Idaho 83226
Tel. (208) 879-4488
Fax (208) 879-4248

Twin Falls Office
161 Fifth Avenue South
Twin Falls, Idaho 83301

SAWTOOTH LAW
OFFICES, PLLC

David P. Claiborne
david@sawtoothlaw.com

S. Bryce Farris
bryce@sawtoothlaw.com

Evan T. Roth
evan@sawtoothlaw.com

Daniel V. Steenson
dan@sawtoothlaw.com

James R. Bennetts, of counsel
jim@sawtoothlaw.com

Katie Kelly, legal assistant
katie@sawtoothlaw.com

Melodie Baker, legal assistant
mel@sawtoothlaw.com

Friday, June 28, 2013

Bureau of Land Management
Gateway West Project
P.O. Box 20879
Cheyenne, WY 82003
Via U.S. Mail
and Via E-Mail: ***Gateway_West_WYMail@blm.gov***

2013 JUL -2 AM 10:00
RECEIVED
BLM
CHEYENNE WYOMING

duplicate

RE: Final Environmental Impact Statement (April 2013)
Gateway West Transmission Line Project
Comments of Idaho Dairymen's Association

Dear Sir or Madam,

This office represents the Idaho Dairymen's Association, Inc. (herein "IDA"). Please accept this letter, and its attachments, as comments on behalf of IDA relative to the *Gateway West Transmission Line Project Final Environmental Impact Statement*, published April 26, 2013 (herein "FEIS"). IDA believes there are material errors in the FEIS analysis of effects of the proposal in relation to the animal environments related to agriculture (in particular – the dairy industry), and further that other reasonable alternatives could have been selected to avoid those significant impacts. These concerns are expressed in detail below.

Idaho's Dairy Industry

IDA was formed on July 5, 1944 by Idaho's dairy industry leaders. The purpose of IDA is to develop and sustain an economically viable Idaho dairy industry. Initially it was composed of and funded by dairy processors and producers. Today, the IDA falls under the umbrella of the United Dairymen of Idaho (UDI), which was formed in 1980 as a single entity that contains two separate organizations – IDA and the Idaho Dairy Products Commission (IDPC). Each organization serves a different purpose under the auspices of the UDI – IDA deals with industry and government relations projects, while IDPC focuses on promotion and marketing projects. Every dairy producer in the State of Idaho is a member of IDA, and the comments submitted herein are made on their behalf.

In 2003, the Idaho Dairy Environmental Action League (IDEAL) was formed, followed by the creation of the IDEAL Foundation in 2008. The IDA teamed with the IDEAL and the IDEAL Foundation to help the Idaho dairy industry and Idaho communities realize the many social and economic benefits of successful livestock operations, while working to protect and enhance important air, water and soil resources. The IDA works tirelessly at the local, state, regional and federal levels to protect and promote the legislative, regulatory and legal interests of its members. Through cooperation with IDEAL, a legal action and defense fund is now established to promote and defend the interests of the Idaho dairy industry in administrative and legal processes that may impact the industry.

Idaho's dairy industry provides significant resources to support research and promotion of dairy products needed to stabilize and sustain Idaho's dairy industry. The significant resources provided by Idaho dairy farmers helps drive demand for Idaho produced dairy products, which in turn contributes to the financial stability of rural communities and benefits the state and regional economies by dairy farmers continued investment. In 2011, on-farm cash receipts from milk produced on Idaho farms amounted to $2.446 billion dollars, ranking it as the largest single sector in Idaho's agriculture industry. It is estimated that the dairy industry of Idaho employs more than 22,730 individuals in the production, processing, transportation, and distribution of its milk and milk products. Allied industries employ an additional 13,470 workers (e.g., hay growers, corn silage growers, custom operators, dairy equipment manufacturers, feed companies, nutritionists & veterinarians). A significant economic impact for Idaho is realized through personal property tax, income tax, sales tax and retail sales generated from income derived from the dairy industry. Idaho is the 2nd largest milk producing state in the twelve western U.S. states and ranks 3rd among all states. As of December 31, 2011, Idaho had 577 dairy farm operations, which produced 13.223 billion pounds of milk (equivalent to 1.537 billion gallons) from 554,139 cows.

duplicate

2013 JUL -2 AM 10:00
RECEIVED
PUBLIC
CHEYENNE WYOMING

The Gateway West Transmission Line Project

The Gateway West Transmission Line Project (herein "Project") is jointly proposed by Idaho Power and Rocky Mountain Power. The companies plan to construct and operate 230 and 500 kilovolt (kV) transmission lines from the Windstar Substation near Glenrock, Wyoming to the Hemingway Substation near Melba, Idaho. The Project is composed of 10 transmission line segments with a total length of approximately 1,000 miles across southern Wyoming and southern Idaho.

The Project would begin at the Windstar Substation in Glenrock, Wyoming and would follow or parallel an existing 230-kV line proposed for reconstruction to the proposed Aeolus Substation near Medicine Bow, Wyoming. It would then proceed as a single-circuit 500-kV line from Aeolus to the Populus Substation near Downey, Idaho. A 345-kV line would connect the Anticline Substation with the Jim Bridger Power Plant. From Populus to the Hemingway Substation southwest of Boise, Idaho, the Project would consist of two single-circuit 500-kV roughly parallel paths—Segments 5, 6, and 8 would travel on a more northerly route toward the Hemingway Substation through the Borah and Midpoint Substations, while Segments 7 and 9 would travel a more southerly route through the proposed Cedar Hill Substation near Murtaugh, Idaho, to the Hemingway Substation. Segment 10 would provide an interconnection

between the Cedar Hill and Midpoint Substations and also provide an interconnection between the more northerly and more southerly routes. The Proponents have proposed this split because of the need to serve loads along the way and also to increase reliability.

The transmission line segments would cross federal, state, and private lands. The ROW width requested for the transmission line ranges from 125 feet for the single-circuit 230kV segment to 250 feet. Approximately 49 percent of the land to be crossed is federal, 7 percent state, and nearly 44 percent is privately owned. The Proponents would negotiate details regarding needed land acquisition across privately owned lands, either in fee or as an easement, for the transmission line and associated facilities (substations, etc.) with each landowner. In exchange for the right to operate the transmission line and facilities, the Proponents would compensate the landowner for the use of the land. Although BLM does not have the legal authority to enforce stipulations on private lands, BLM has recognized and agrees it has the obligation to recommend stipulations to reduce impacts as part of the NEPA process. FEIS, at 1-36. As part of the NEPA analysis, BLM must analyze the potential environmental impacts of the Project, whether those effects will be realized on public or private lands. See, e.g., Citizens for a Better Henderson v. BLM, 768 F.2d 1051 (10th Cir. 1985) (holding that, in an EIS for a proposed power transmission line, BLM was required to determine hazards posed by the electrical line to private citizens residing on private land adjacent to a federal right-of-way corridor).

As part of the analysis of the Project, significant issues for analysis have been identified. As is relevant to the comments provided herein, the following significant issues have been identified –

Land Use and Recreation

- How would the project affect concentrated animal feeding operations (CAFO), which include dairy producers? FEIS, at 1-49.
- How would the project affect current agricultural systems, including pivot irrigation and advanced positioning systems used in farm equipment? FEIS, at 1-49.

Agriculture

- How much agricultural land would be impacted, and what would the effects be? FEIS, at 1-50.
- What would be the impacts to agricultural production including equipment operation and aerial spraying? FEIS, at 1-50.
- Would there be a disruption to dairy operations and other types of CAFOs? FEIS, at 1-50.
- Would the transmission line cause electronic interference with agricultural equipment? FEIS, at 1-50.

Electrical Environment

- Would electric and magnetic fields (EMF) associated with transmission lines cause health effects? FEIS, at 1-51.
- Would stray voltage be a concern in the context of animal care where unwanted voltage on feeders, watering stations, or equipment such as milking machines, can lead to reduced food or water intake? FEIS, at 1-51.[1]

[1] In the dairy environment, unwanted voltage may also be experienced at headlocks, loop stalls and fencing.

duplicate

2013 JUL -2 AM 10:00
RECEIVED
CHEYENNE, WYOMING

All of the above issues describe potential impacts to IDA members' dairy operations. For example, one IDA member, Curtis DeVries, is a dairy producer with facilities located near Kuna Cave Road, Kuna, Idaho. This area of operation is indicated on **Attachment 1**, and is located within the area impacted by the preferred alternative. As is readily apparent, the transmission line would cut through the middle of two pivot-irrigated fields, and comes within less than one mile of milking parlors. Had BLM instead selected the Project proponent's proposed route, several miles to the south, any impacts to dairy producers would have been avoided. See **Attachment 2**.

Another IDA Member, Aardema Dairy, is a dairy producer with facilities located just west of U.S. Highway 93 and the E 700 N Road, near Jerome, Idaho. This area of operation is indicated on **Attachment 3**, and is located within the area impacted by the preferred alternative. Another dairy, along River Ranch Road south of Gooding, is also adjacent to the preferred alternative. The transmission line in these areas will interfere with several pivot irrigated fields, and impact milking parlors and feedlots associated with the dairy that are located within the impact zone. Had BLM instead selected the Project proponent's proposed alternative route, just to the south, several other dairy operations would be located within the impact zone. These include operations along the E 2400 S Road near Hagerman, Idaho, and along the S 1300 E Road, also near Hagerman. See **Attachment 4**. For these reasons, the IDA suggests consideration of two other reasonable alternatives, one at the Midpoint Substation, proceeding north therefrom and bypassing the nearby dairy operations to connect back to the preferred alternative, and the other bypassing River Ranch Road south of Gooding to avoid that dairy operation. See **Attachment 5**.

Yet another IDA member, Bettencourt Dairies, is a dairy producer with facilities located along the 800 S Road south of Kimberly, Idaho. This operation is indicated on **Attachment 6**, and is located within the area impacted by the preferred alternative. As is readily apparent, the transmission line would come within less than one mile of milking parlors. Had BLM instead selected the Project proponent's proposed alternative route, incoming from the south, any impacts to dairy producers would have been avoided. See **Attachment 7**.

There may be other affected dairy operators, and the concerns of IDA extend to all dairy operations potentially impacted by the Project. After the FEIS was published, the detailed mapping of CAFOs conducted by Tetra Tech was requested of the BLM, but it has yet to be received.[2] After analysis of that data, once provided, the IDA will be better positioned to identify all impacted dairies, and reserves the right to supplement these comments once the BLM provides the previously requested information.

duplicate

2013 JUL -2 AM 10: 00
RECEIVED
BLM-WY
CHEYENNE WYOMING

[2] This office requested that information by email to Gateway_West_WYMail@blm.gov on May 9, 2013. The email requested the Tetra Tech 2010a report and mapping referenced at Ch. 3, Sec. 18, pg. 12 of the FEIS. No response to that communication has been provided.

SAWTOOTH LAW

Stray Voltage and its Effects

The primary concern of the IDA with respect to location of the transmission line is stray voltage and its effects on the domestic animal environment. To avoid these effects, the transmission line should be located away from dairy operations, milking parlors and dairy feedlots.

Stray voltage is basically a form of neutral-to-earth voltage to a specific location. See Abed, Salem & Burke, *Evaluation of Induced Stray Voltages from Transmission Lines using EMTP*, at 1 (copy at **Attachment 8**). Most concerns with stray voltage in the dairy industry occur due to induction. *Id.* Animals are sensitive to stray voltage and suffer effects therefrom even when humans may not notice the stray voltage. *Id.* At 1 volt of contact, a cow experiences negative effects such as decreased milk production, reluctance to eat or drink, and other erratic behavior are noticeable. *Id.* In the Abed, Salem & Burke study, a 13.8 kV transmission line, with three-phase multi-grounding consistent with the IEEE National Electric Safety Code, was analyzed for stray voltage effects. *Id.* at 2. The study found that such a transmission line, through almost any scenario, induced stray voltage of an amount significant enough to effect animal behavior. *Id.* at 5. Recall that the Project will involve 230 kV and 500 kV transmission lines, well in excess of the study model, making it a near certainty that stray voltage induction will be significant in the dairy environment.

Exacerbating the stray voltage effects of transmission lines is the effect of nearby distribution lines. Studies have confirmed that transmission lines will cause parallel distribution lines within one mile to induce stray voltage. See Patel & Lambert, *Induced Stray Voltages from Transmission Lines* (copy at **Attachment 9** and **Attachment 10**). In the referenced study, the experts examined the interplay between a 500 kV transmission line and a 13kV distribution feeder line. *Id.* at 1. They found induced stray voltage as high as 18 volts along a distribution feeder parallel to the transmission line – an amount of voltage clearly enough to effect animal behavior. *Id.* Of the stray voltage, 73% was due to the load current in the 500 kV transmission line, while the remaining 27% was due to the distribution feeder. *Id.* The experts were able to rule out any other contributors to stray voltage, such as corroded neutrals or other conditions on the farm property. *Id.* They then evaluated various means of mitigation. *Id.* at 2-5. It was determined that traditional means of mitigation, such as a balanced load on a three phase circuit, was not effective to eliminate the stray voltage. *Id.* at 6. Also, installing neutral isolators at areas with high stray voltage would cause an increase in stray voltage in other areas. *Id.* So, in essence, proper mitigation would require isolation transformers at nearly all distribution areas parallel to the transmission line, and cable and telephone grounding circuits would need to be isolated from the electric isolation transformers. *Id.* In most cases, this would require significant modifications to existing systems.

The FEIS acknowledges that dairy farms could be subjected to stray voltage once the Project goes live. FEIS, at 3.18-25. However, the FEIS incorrectly concludes that stray voltage effects on cows are due to "electrical equipment on the farm and local electrical wiring, not because of the operation of nearby transmission lines." *Id.* The actual scientific data, as detailed above and in the attachments, demonstrates that transmission lines carrying loads equivalent to the Project contribute 73% of the

duplicate

RECEIVED BLM CHEYENNE WYOMING 2013 JUL -2 AM 10:50

stray voltage in areas where power is locally distributed within one mile of the transmission line, and which is experienced after isolating all on-farm contributors.

The FEIS also concludes that "most cows would need a current of 3 to 4 volts before behavioral changes could be noticed." FEIS, at 3.18-25. This is another error in the FEIS conclusions. Available science actually indicates cow behavior changes at as little as one volt of induced stray voltage. Moreover, the test case on a transmission line comparable to the Project found induced stray voltage as high as 18 volts, admittedly enough to effect dairy cow behavior under the FEIS conclusion. The 500 kV proposed transmission lines will undoubtedly induce stray voltage of a high enough amount to effect dairy cow behavior, and the FEIS fails to recognize this fact and analyze the alternatives in light of this information.

Later, the FEIS concludes that "transmission lines such as the one proposed are not normally associated with . . . stray voltage because the transmission line is a balanced, three-phase line." FEIS, at 3.21-12. This is yet another flaw in the FEIS. As detailed above, test cases on transmission lines as low as 13.8 kV, with three-phase balanced loads, have found induced stray voltage high enough to effect animal behavior.

The FEIS also concludes that the Project should not pose a concern to dairies in Idaho because the preferred route is not close enough to any dairies to cause an impact. This is simply untrue. As detailed above, at least two dairies are within the impact zone of the preferred route, and the available studies indicate that stray voltage with a negative effect on cow behavior will likely occur as a result. The FEIS fails to acknowledge this, and fails to accept other alternatives that could avoid such an impact.

The FEIS concludes that "Gateway West should not affect local distribution systems or create a change in the occurrence of stray voltage." FEIS, at 3.21-33. This is yet another fundamental flaw in the FEIS' conclusions regarding stray voltage. The scientific studies, detailed above and attached, show that a 500 kV transmission line will significantly effect induced stray voltage, will heighten the same, and will contribute as much as 73% of the resultant stray voltage.

duplicate

RECEIVED
CHEYENNE WYOMING
2019 JUL -2 AM 10:00

Conclusion

The FEIS is significantly flawed with respect to its analysis of induced stray voltage and the effect thereof on dairy operations. The FEIS fails to acknowledge the effects the stray voltage will have on domestic animal behavior. The FEIS should have appropriately addressed these issues as explained above. In light thereof, with respect to Segment 8, from I-84/Boise Stage Stop to Hemingway Substation, the FEIS should have selected the Project proponent's proposed route. Also with respect to Segment 8, from the Midpoint Substation to north of Glenns Ferry, the FEIS should have selected, or at least considered, two different alternatives, as reflected on **Attachment 5**, so as to avoid dairy impacts. With respect to Segment 7, from Albion Valley Road to the Cedar Hill Substation, the FEIS should have selected the Project proponent's proposed alternative route. These selections would have completely avoided any dairy impacts. The IDA suggests that either: (1) any record of decision select the above alternatives with respect to the designated segments; or, alternatively, (2) that further study and analysis be conducted of

SAWTOOTH LAW
OFFICES PLLC

the Project corridor, in light of the above stray voltage discussion, and a supplemental EIS be issued for further comment, analysis and discussion.

Thank you for the opportunity to comment. We trust that the above will be well-received and fully considered.

Very Truly Yours,

Daniel V. Steenson
David P. Claiborne

Encl.

cc: Idaho Dairymen's Association (w/ encl.)
Bonnie Butler, Office of the Governor (w/ encl.)
Celia R. Gould, Director, Idaho Dept. of Agriculture (w/ encl.)

duplicate

2013 JUL -2 AM 10:00
RECEIVED
DOI-BLM
CHEYENNE WYOMING

SAWTOOTH LAW
OFFICES PLLC

ATTACHMENT

1

duplicate

2013 JUL -2 AM 10:00
RECEIVED
BLM
CHEYENNE WYOMING

101003

duplicate

2013 JUL -2 AM 10:00
RECEIVED
DOI-BLM
CHEYENNE WYOMING

SAWTOOTH LAW
OFFICES, PLLC

ATTACHMENT

2

duplicate

2013 JUL -2 AM 10:00
RECEIVED
BLM
CHEYENNE WYOMING

101003

duplicate

2013 JUL -2 AM 10:00
RECEIVED
DOI BLM
CHEYENNE WYOMING

SAWTOOTH LAW
OFFICES, PLLC

ATTACHMENT

3

duplicate

2013 JUL -2 AM 10:00
RECEIVED
DOI-BLM
CHEYENNE WYOMING

101003

duplicate

2013 JUL -2 AM 10: 00
RECEIVED
BLM
CHEYENNE WYOMING

SAWTOOTH LAW
OFFICES PLLC

ATTACHMENT

4

duplicate

2013 JUL -2 AM 10:00
RECEIVED
DOI-BLM
CHEYENNE WYOMING

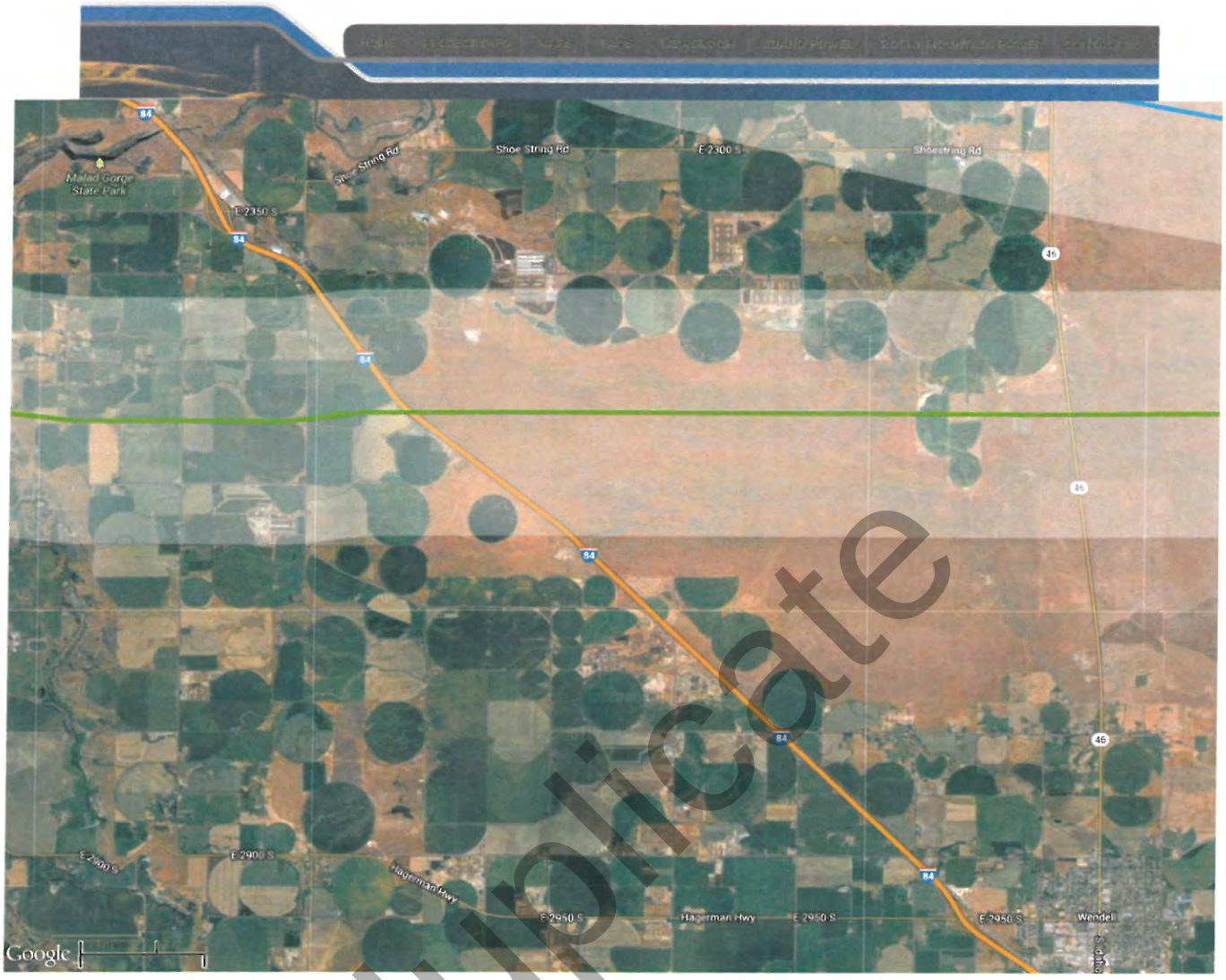

duplicate

2013 JUL -2 AM 10: 00
RECEIVED
DOI-BLM
CHEYENNE WYOMING

SAWTOOTH LAW
OFFICES, PLLC

ATTACHMENT

5

duplicate

2013 JUL -2 AM 10: 00
RECEIVED
DOI-BLM
CHEYENNE WYOMING

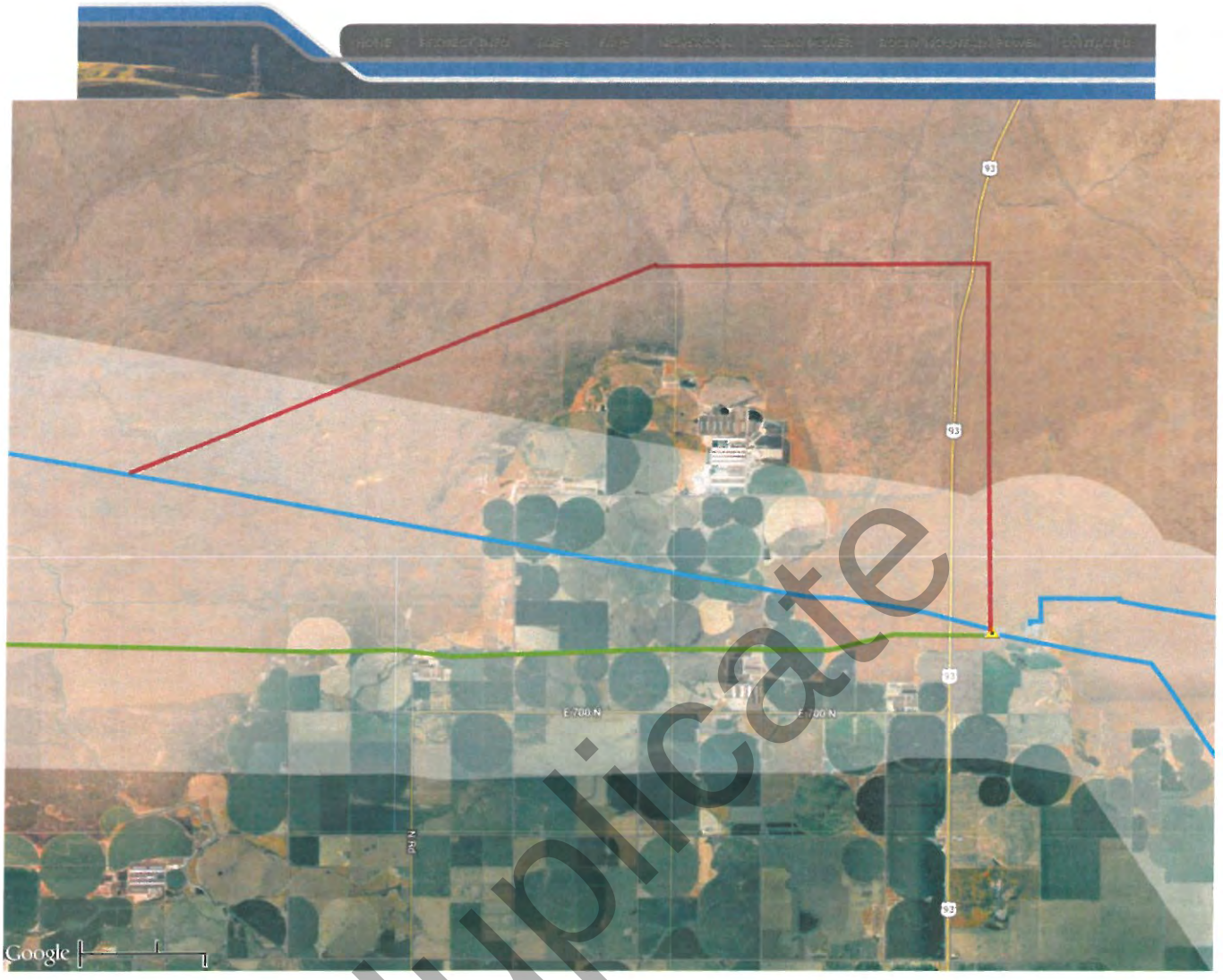

duplicate

—— = Proposed Alternative for Consideration

2013 JUL -2 AM 10:00
RECEIVED
BLM
CHEYENNE WYOMING

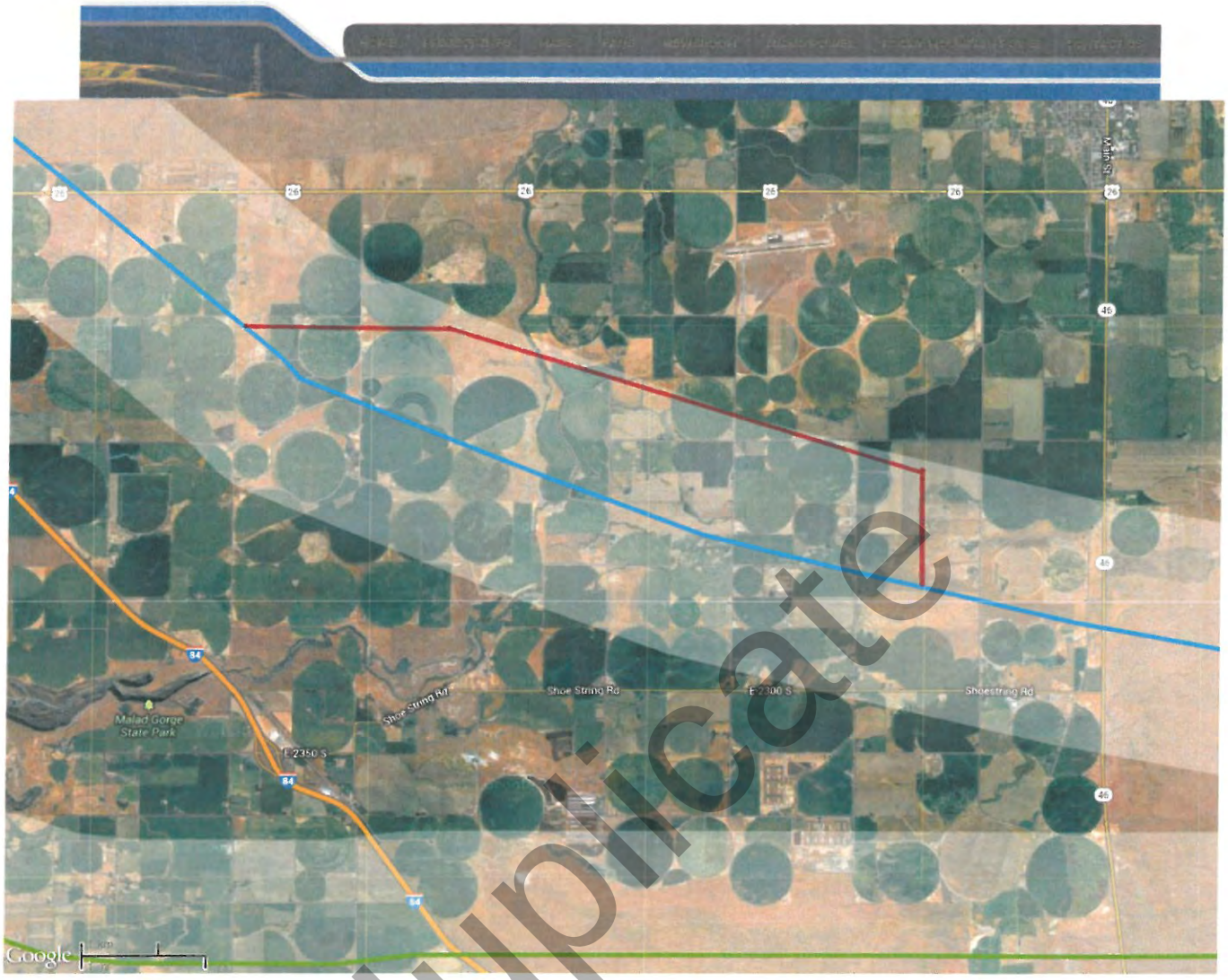

duplicate

—— = Proposed Alternative for Consideration

2013 JUL -2 AM 10:00
RECEIVED
BLM-SLM
CHEYENNE WYOMING

SAWTOOTH LAW
OFFICES, PLLC

ATTACHMENT

6

duplicate

2013 JUL -2 AM 10:00
RECEIVED
DOR-RLM
CHEYENNE WYOMING

101003

duplicate

2013 JUL -2 AM 10:00
RECEIVED
BLM
CHEYENNE WYOMING

SAWTOOTH LAW
OFFICES, PLLC

ATTACHMENT

7

duplicate

2013 JUL -2 AM10:00
RECEIVED
DOI-BLM
CHEYENNE WYOMING

101003

duplicate

2013 JUL -2 AM 10:00
RECEIVED
BLM
CHEYENNE WYOMING

SAWTOOTH LAW
OFFICES, PLLC

ATTACHMENT

8

duplicate

2013 JUL -2 AM 10: 00
RECEIVED
BLM
CHEYENNE WYOMING

101003
2013 JUL -2 AM 10: 00
RECEIVED
CHEYENNE, WYOMING

Evaluation of Induced Stray Voltages from Transmission Lines using EMTP

Nagy Abed, *Senior Member, IEEE*, Sasan Salem, *Member, IEEE*, and Jim Burke, *Fellow, IEEE*

***Abstract*-- The purpose of this paper is to study the effect of transmission system parameters and operating conditions on generated stray voltage levels. . This includes the transmission line conductor configurations, line loading levels, grounding system parameters, the feeder configuration (radial or ring configuration) and unbalance loading. This enables a better way to understand how different electrical parameters impact the level of NEV and currents at points of interest during different utility operating conditions. Excessive stray voltages levels may have a negative effect on dairy farm cows and endanger personnel safety. EMTP was used to simulate the coupled electromagnetic-power circuit system. EMTP models of the poles and the line phase, neutral, and ground wire were built to represent the transmission line electromagnetic behavior and the stray voltage generation mechanism. The parameters of the proposed models were obtained from the technical literature. Different simulations were conducted by varying the system parameters and operating conditions. A discussion of these results is presented.**

Index Terms—Stray Voltage, Induction, Transmission Line, Earth, Earth Current, Ground, Step Potential, Touch Potential

I. Introduction

Stray voltage in power systems has been studied prior to the 1970's. Stray voltage is a special case of neutral-to-earth voltage (NEV); it differs from NEV because it is defined at a specific location [1]. Stray voltage in power systems has been studied prior to the 1970's. It was typically considered normal, with some issues arising from the dairy industry, pig farms owners, sensitive electronic loads and pool owner. In the case of transmission lines, however, stray voltage is normally the result of induction. Stray voltage has stirred significant public attention. The "danger" of stray voltage has been exaggerated in some articles in the press.

The reaction of animals to stray voltages varies with the amount of the voltage. Animals are more sensitive to small voltages than humans, and will react to voltages that humans cannot feel. The Wisconsin Public Service Commission defines a "level of concern" of 1 V for the cow contact voltage, which corresponds to 2 mA of current through a 500 Ω resistor [3]. The Symptoms reportedly attributed to significant levels of stray voltage include [1, 2,3]:

1. Decreased milk production of dairy cows
2. A change in the animal's behavior (e.g. Animals' reluctance to eat or drink from a feeder, erratic behavior, May not drink enough water etc)
3. Improper operation of sensitive electronic loads

Stray voltage at barns is normally measured across a 500-Ω resistor, which represents the typical resistance of a cow.

The effect of stray voltage on humans depends on their contact resistance and their body resistance (i.e. current). There are a number of references used in the industry that discuss the resistance of the human body. The body's internal resistance is about 300Ω. Resistance including the skin contact resistance is in the range of 500 to 5000 Ω [3, 8] but varies widely. Electrocution can occur for currents through the heart on the order of 60 to 100 mA; 250 mA through the heart is almost always fatal [3]. These levels of current interfere with the heart's internal electrical pacemaker and force the heart to stop beating properly. During this ventricular fibrillation, the heart muscle fibers contract erratically and unpredictably, leading quickly to death from lack of oxygen to the brain.

The following factors contribute to induced stray voltages on transmission lines:

1- Unbalanced currents in the transmission line conductors

2- Transmission line conductors configuration (pole configuration and untransposed lines)

3- Additive phase angles between the induced and load related currents in neutral system

4- Soil resistivity along the transmission line

Neutral-to-earth voltages cannot be studied using existing load-flow programs. To accurately model stray voltage, a more general steady-state circuit analysis program such as EMTP is needed. Accurate modeling involves modeling the neutral and the individual grounding electrodes [3].

This paper describes a case study involving induction related stray voltage concerns, simulation, and measurement, under different operating conditions.

II. System Modeling

This section deals with the modeling methodology utilized to simulate and measure the stray voltage. Figure 1 shows the

Nagy Abed, Sasan Salem , and Jim Burke are with Quanta Technology, ,Raleigh, NC, USA (nabed@quanta-technology.com, ssalem@quanta-technology.com, jburke@quanta-technology.com)

978-1-4244-6551-4/10/$26.00 ©2010 IEEE

duplicate

schematic diagram of the 13.8 kV transmission test system used for the study.

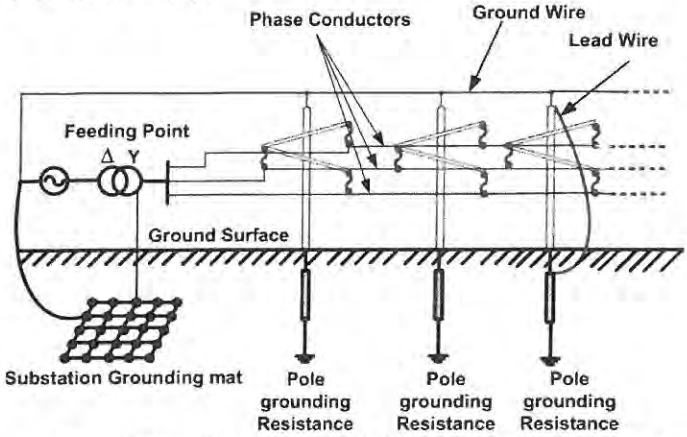

Fig. 1 Schematic Diagram of the Modeled Transmission Line System

The transmission line model utilized in the study is a distributed Constant Parameter (CP) model. The model is based on the Bergeron's traveling wave method [6]. In this model, the wave equation is solved to obtain the line operating characteristics (current, and voltage).

The transmission line parameters per unit length were obtained from geometrical and physical information (line dimensions (the distances between the conductors), height above ground, conductor and soil resistivity).

For multiphase system the wave equations are written in the matrix form:

$$\frac{d^2V}{dx^2} = Z'Y'V \tag{1}$$

$$\frac{d^2I}{dx^2} = Z'Y'I \tag{2}$$

Where:

$[Z'] = [R'] + s[L']$ Series Impedance per unit length

And $[Y'] = [G'] + s[C']$ Shunt Branch per unit length

The multiphase line is transformed into a decoupled set of modal circuits as shown in Figure 2.

With eigenvalue theory, it becomes possible to transform the above two coupled equations from phase quantities to modal decoupled quantities. The multiphase line is transformed into a decoupled set of modal circuits. The equations are then solved to obtain the transmission line terminal response.

Equations (1) and (2) are transformed into model domain

$$-\frac{d\hat{V}}{dx} = T_v^{-1} Z' T_i \hat{I} \tag{3}$$

$$-\frac{d\hat{I}}{dx} = T_i^{-1} Y' T_v \hat{V} \tag{4}$$

Where $V = T_v \hat{V}$, $I = T_i \hat{I}$ and $T_i = (T_v^t)^{-1}$

The completely decoupled equations (3) and (4) are then solved to obtain the transmission line terminal response.

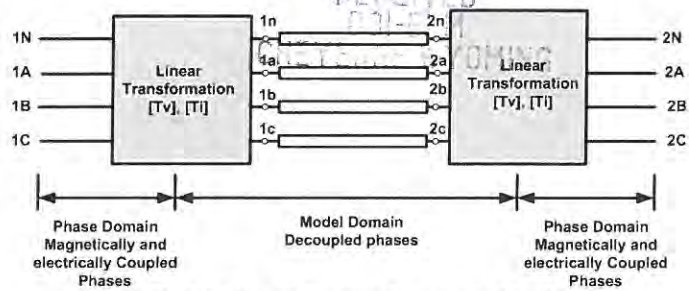

Fig. 2 The Distributed Constant Parameters Line Model

The neutral of the overhead line is often grounded at intervals along the line as required by IEEE National Electric Safety code [11]. Figure 3 illustrates two segments of three phase multigrounded line model (Carson's model).

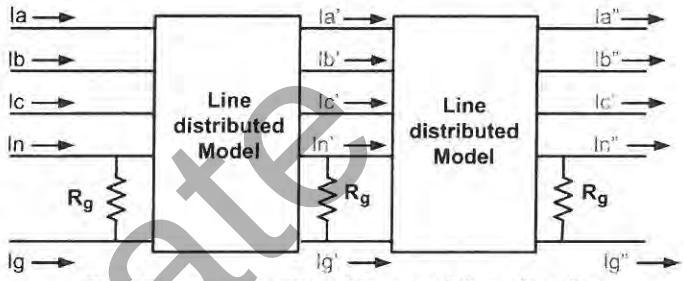

Fig. 3 Two segments of a multigrounded three phase line

In this study, a transmission system with 160 poles was modeled. The transmission line consists of untransposed three wires with a static wire. The transmission line is grounded every four poles. Appropriate data was obtained to model poles, lines, shield wires, ground rods, and the substation grounding.

Unbalanced currents on transmission lines, caused by unbalanced load and/or un-transposed lines induce a voltage on parallel lines including ground wires, communication lines, and other transmission or distribution wires. The study was conducted for balanced and unbalanced loading and with uniform pole configuration. The induced voltages are considered to be steady state and 60 Hz so; they manifest similar characteristics to "stray voltage".

III. Simulations and Results

A transmission system with 160 poles was modeled to determine the impact of various system parameters on the generated stray voltage level. For this purpose the following system parameters were studied:

- Equivalent of substation grounding mat resistance
- Line loading
- Pole ground rod resistance
- Line Span length
- Unbalanced line loading
- The transmission line boundary conditions (i.e. radial or dual supply)

a. Impact of Substation Grounding Resistance on the Generated Stray Voltage

The effect of substation grounding on the stray voltage

duplicate

levels is first examined using five substation grounding resistance: 0.1, 0.25, 0.5, 0.75 and 1 Ω respectively. A series of cases were conducted in which the substation ground resistance was changed and stray voltage levels were recorded for both radial and dual supply feeder.

Figure 4 shows the generated stray voltage in volt that result from these cases for dual supply feeder. From the results, it can be seen that the change in the substation resistance from 0.1 ohms to 1.0 Ohm will increase the measured stray voltage levels significantly. It is of interest that there is a significant difference between 0.1Ω and 0.5Ω, but above 0.75Ω, changes in the substation grounding resistance have less effect on the generated stray voltage levels.

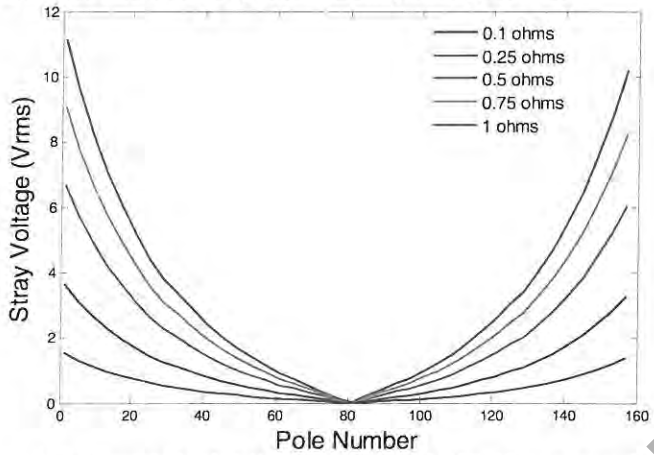

Fig. 4 Impact of Substation Grounding on SV level for dual supply feeder

Most substation grounds are generally assumed to be on the order of 1 ohm (or higher in distribution substations). The stray voltage rises particularly on the poles in the vicinity of the substation, which is consistent with the results of other papers on this topic.

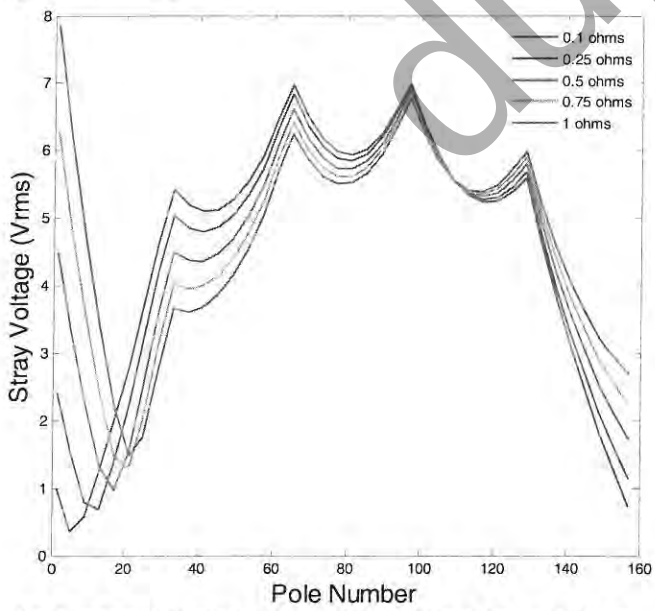

Fig. 5 Impact of Substation Grounding on SV level for radial feeder

Figure 5 shows the generated stray voltage for different substation grounding values for radial feeder. By increasing the substation resistance from 0.1 ohms to 1.0 Ohm the stray voltage will increase significantly at both terminal of the line while the values between the two terminals varies differently from the two way feed feeder case. The results show that there is a significant difference between 0.25Ω and 0.5Ω, but above 0.75Ω, changes in the substation grounding resistance have less effect on the generated stray voltage levels.

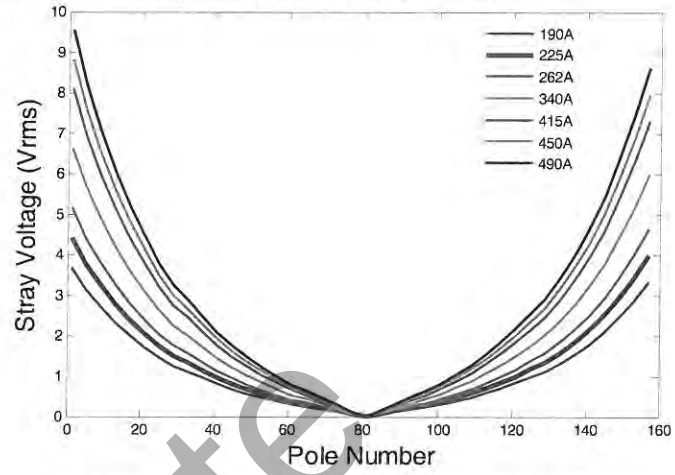

Fig. 6 Impact of Line loading on the Generated SV Level for dual supply feeder

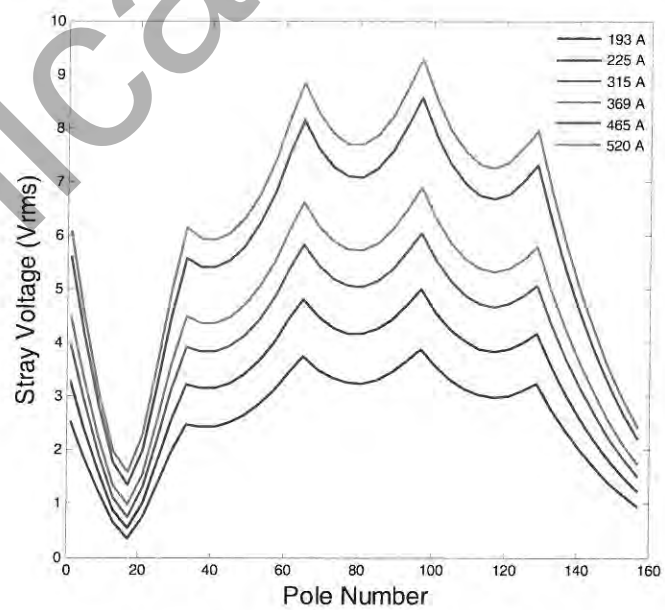

Fig. 7 Impact of Line loading on the Generated SV Level for radial feeder

b. Impact of Line Loading on the Generated Stray Voltage

To examine the effect of transmission line current loading on the generated stray voltage levels, different loading cases were simulated and the generated stray voltage levels were measured.

Figure 6 and 7 shows the stray voltage levels for various line currents for dual supply feeder and radial feeder respectively. As was expected, higher line currents induce higher voltages in the shield wire and the stray voltages will increase accordingly.

duplicate

c. *Impact of Pole Grounding Resistance on the Generated Stray Voltage*

In this part of the study, the pole grounding resistance is varied between 5-200 ohms to study the relationship between the induced stray voltage levels and the pole grounding. These range represent typical high and low pole grounding resistance.

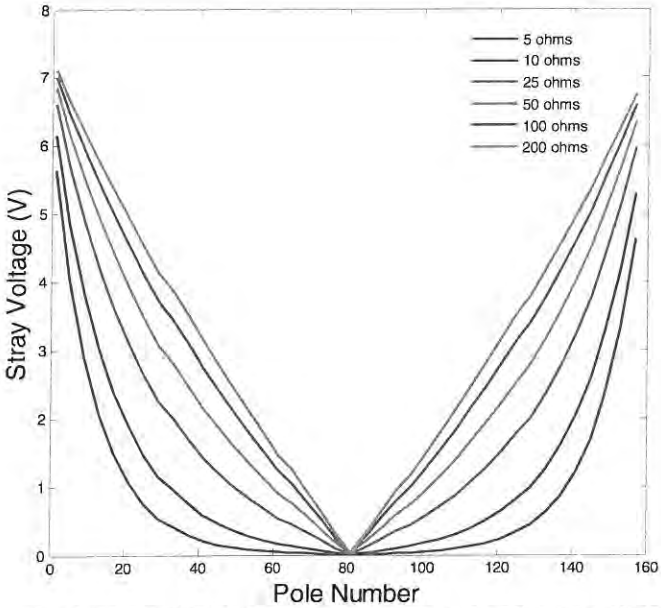

Fig. 8 Impact of Pole Grounding Resistance on the SV Level on dual supply feeder

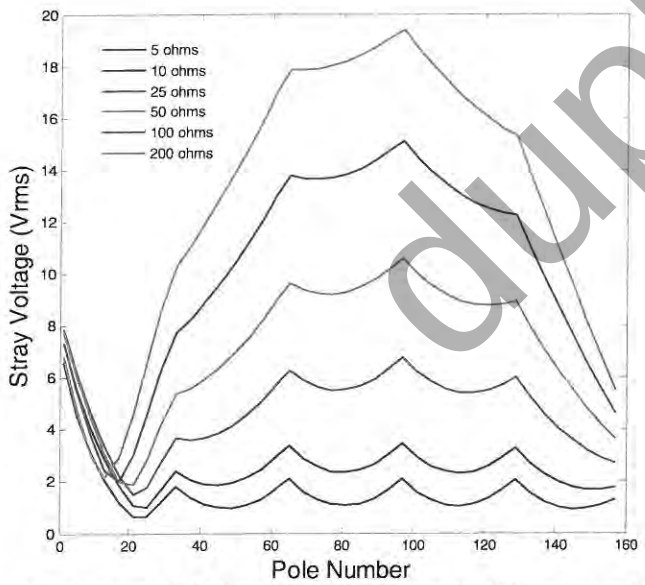

Fig. 9 Impact of Pole Grounding Resistance on the SV Level on radial feeder

The impact of pole ground rod resistance on stray voltage is shown in Figure 8 for dual supply feeder. The simulation results demonstrate that there is a significant difference between 5Ω, 10Ω and 25Ω, but above 50Ω, changes in the pole grounding resistance have less effect on the generated stray voltage levels. In many areas, it is very difficult to drive ground rods to attain values less than 50 ohms, so the impact of grounding, to reduce stray voltage, might be considered minimal for most transmission lines.

The impact of pole ground rod resistance on stray voltage is shown in Figure 9 for radial feeder. The simulation results demonstrate that there is a significant difference for pole grounding resistance values above 25Ω, but below 10Ω, changes in the pole grounding resistance have less effect on the generated stray voltage levels.

d. *Impact of Line Span on the generated Stray Voltage*

In order to evaluate the line span effect on the generated stray voltage, a series of simulations was conducted in which the line span was changed. The line span was changed between three values: 40, 50, and 60 meters respectively. Figure 10, and Figure 11 shows the impact of the line span length on the stray voltage for dual supply feeder and radial feeder respectively. The simulation results demonstrated the line span length has a little impact on the stray voltage level.

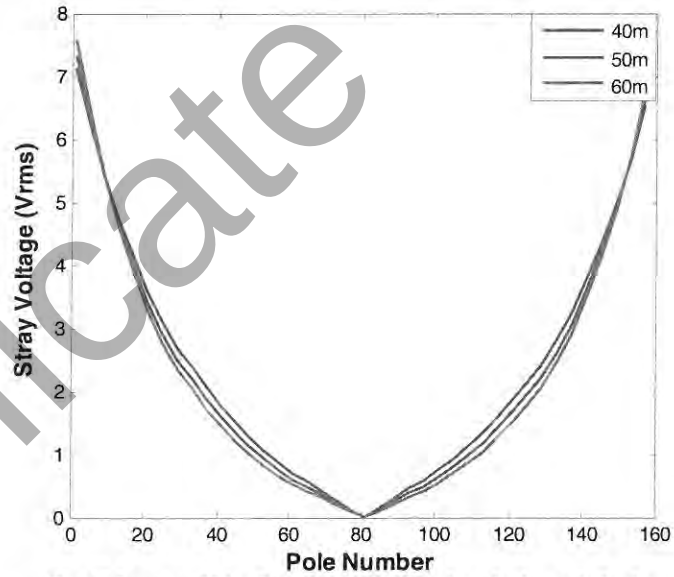

Fig. 10 Impact of Line Span on the SV Level on dual supply feeder

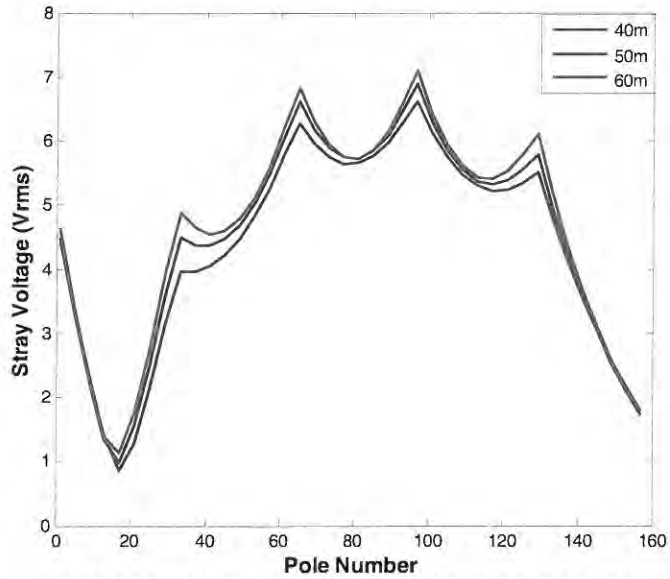

Fig. 11 Impact of Line Span on the SV Level on radial feeder

duplicate

e. *Impact of load unbalanced on the Stray Voltage*

To evaluate the impact of unbalanced loading on the stray voltage the transmission line loading was changed to create currents unbalance one of the phases. The loading unbalance was varied between 2% to 20%.

Figure 12 shows the stray voltage levels results for different unbalance loading for dual supply feeder. The results show that stray voltage increases with the increase in the unbalance (the zero sequence current).

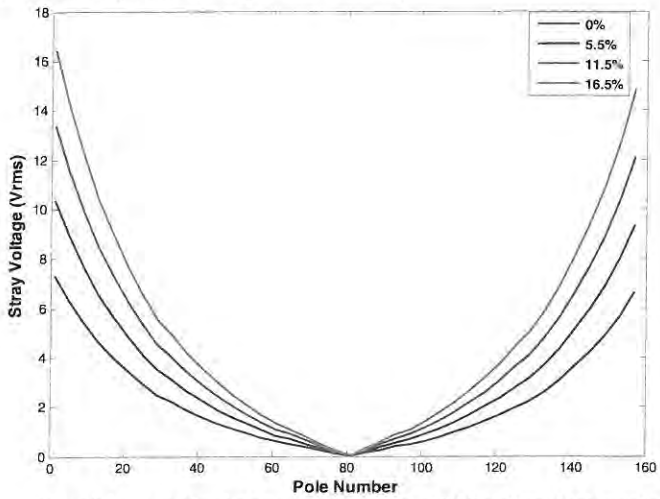

Fig. 12 Impact of unbalance loading on the SV Level on dual supply feeder

Figure 13 shows the stray voltage levels results for different unbalance loading for radial feeder. The results show that the stray voltage increases with the increase in the unbalance in the system.

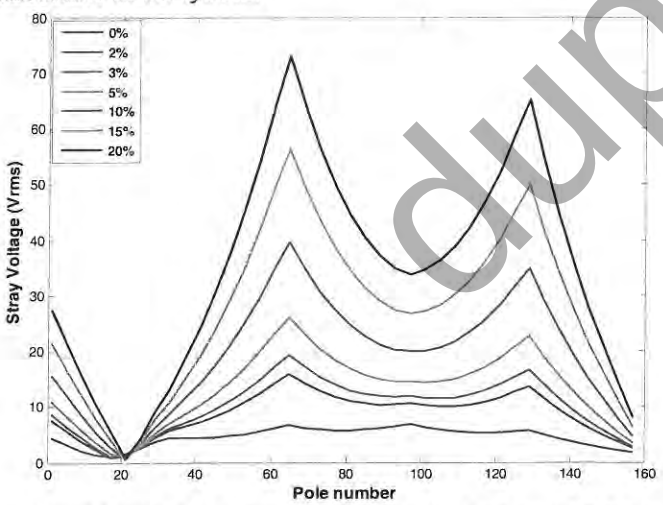

Fig. 13 Impact of unbalance loading on the SV Level on radial feeder

IV. CONCLUSIONS

An EMTP based methodology was developed for simulation and analysis of stray voltage (SV) and neutral-to-earth voltage (NEV) levels as well as the neutral currents along the transmission system under several types of system conditions, or grounding. This enables a better way to understand how different electrical parameters impact the level of SV and currents at points of interest during different utility operating conditions.

Transmission lines induce stray voltage levels for virtually all voltages and configurations. Also, transmission lines will usually cause stray voltage that, measured with a voltmeter, may exceed the threshold limits of regulatory bodies. The effect of the stray voltage on humans and animals is highly affected by the surrounding condition (earth resistivity, contact resistance, etc).

Finally, the main conclusions for this analysis are:

- Substation grounding has a significant impact on SV levels
- Line loading plays a significant role in SV levels
- Unbalanced transmission line current loading increases the stray voltage levels.
- Line Span length does not have much impact on the SV.
- The stray voltage profile depends on the transmission line boundary conditions.

V. REFERENCES

[1] A.M. Lefcourt, "Effects of Electrical Voltage/Current on Farm Animals: How To Detect and Remedy Problems," U.S. Department of Agriculture, Agriculture Handbook No. 696, 1991.

[2] J. Burke, "The Confusion Surrounding Stray Voltage", 2007 IEEE Rural Electric Power Conference, P. C1-C5.

[3] T.A. Short, "Electric Power Distribution Handbook", CRC press, 2004

[4] E. R. Collins, and J. Jiang, "Analysis of Elevated Neutral-to-Earth Voltage in Distribution Systems With Harmonic Distortion" IEEE Transaction on power delivery, Vol. 24, No.3, July 2009

[5] D. J. Ward, J. F. Buch, T.M. Kulas, and W. J. Ros, "An Analysis of the Five-Wire distribution system" IEEE Transaction on power delivery, Vol. 18, No.1 Jan 2003

[6] T. C. Surbrook, N. D. Reese, A. M. Kehrle," Stray Voltage: Sources and Solutions", IEEE Transactions on Industry Applications, Vol. IA-22, No. 2, March 1983.

[7] M. E. Galey, "Benefits of performing unbalanced voltage calculations," IEEE Transactions on Industry Applications, Vol. IA-24, No. 1, Jan-Feb 1988, pp. 15-24.

[8] J. Burke, *Power Distribution Engineering: Fundamentals and Applications*, Marcel Dekker, INC., 1994.

[9] J. Burke, C. Untiedt, "Stray Voltage: Two Different Perspectives" – IEEE REPC 2008

[10] IEEE Std. 80-2000, IEEE Guide for Safety in AC Substation Grounding.

[11] IEEE Std. C2-2007 The National Electrical Safety Code,2006

Nagy Abed (M'07-SM'09). He received his B.Sc. and M.Sc. degrees from Mansoura University, Egypt, and his PhD from Florida International University, Miami. His research interests include power system modeling, fault diagnosis, power quality, FACTS devices, Application of Finite Element in power system and real time control with HIL. He published more than 43 articles and technical papers in refereed Journals and Conference Proceedings.

Sasan Salem is a Principal Engineer with Quanta Technology. He received his BS in Electrical Power Engineering form Iran university of Science and Technology and his M.Sc. from Concordia University in Montreal. His main research interests include power system analysis and control and FACTS applications in power systems.

Jim Burke is an Executive Advisor with Quanta Technology. He has been in the industry over 43 years. He is the former chair of the IEEE Distribution Subcommittee as well as the Working Group on Distribution Neutral Grounding. He is a Fellow of the IEEE

duplicate

2013 JUL -2 A 10:0
RECEIVED
DOCKET
CHEYENNE WYOMING

SAWTOOTH LAW
OFFICES, PLLC

ATTACHMENT

9

duplicate

2013 JUL -2 AM 10:00
RECEIVED
DOIFBLM
CHEYENNE WYOMING

2013 JUL -2 AM 10:00
RECEIVED
CHEYENNE WYO

Induced Stray Voltages from Transmission Lines

Shashi Patel, *Senior Member, IEEE and* Frank C. Lambert, *Senior Member, IEEE*

Abstract— **Stray voltages are inherent in four-wire multigrounded distribution systems. At the customer's premise, these voltages result from the interaction of multiple parameters of the primary and secondary neutral systems. The causes of stray voltages typically include large unbalanced loads in the neutral system, high neutral impedance, and lack of equipotential grounding at the customer's premise. Non-conventional sources of stray voltages may also exist. These sources may consist of large triplen harmonic currents on the neutral system or induction from a nearby transmission line. This paper describes a case study involving induced stray voltages on a single phase distribution line running parallel with a 500 kV transmission line.**

Index Terms—**stray voltage, induction, transmission line**

I. Introduction

It is not uncommon for a distribution line to co-exist with a transmission line, either on the same right-of-way or as an underbuilt circuit. For such distribution lines, high neutral to earth voltages (N-E voltages) due to induction are always a concern. Underbuilt distribution lines are subject to higher NEVs due to close proximity of the transmission line.

The following factors contribute to induced stray voltages on a distribution line:

- Currents in the transmission line conductors
- Proximity of the distribution line to the transmission line
- Length of the parallel section
- Additive phase angle between the induced and load related currents in the neutral system
- Soil resistivity along the parallel section

This paper describes a case study involving induction related stray voltage concern, measurement, analysis, and mitigation.

II. Concern

This project investigated stray voltage concerns caused by a 500 kV transmission line. The transmission line parallels a one mile section of a 13 kV distribution feeder and is believed to be the primary source for the stray voltage. When the problem was first detected, approximately 18 volts was measured at a customer's spigot. At the time of the investigation, the customer and his daughter each owned a house at the southern end of the parallel section.

Initially, the utility company carried out several investigations and applied various mitigation means on the feeder and at the customers' houses. The most effective mitigation means was the installation of surge arresters between the primary and secondary neutrals at the two houses. Although the stray voltage problem was effectively mitigated, concerns for other customers along the parallel section remained. Future expansion in the area was another reason why the utility company owning the distribution system wanted stray voltage mitigation for the entire tap.

III. Scope

The project scope included measuring stray voltage and related parameters, identifying various stray voltage sources, and finally recommending mitigation means that could be effectively applied. A computer program was used to model the transmission and distribution systems. NEETRAC validated the computer model first by comparing the analyzed data with the measured data. In the next step, source identification and mitigation analysis were performed. Based on this analysis, NEETRAC made recommendations for effective mitigation of stray voltages along the parallel section.

IV. Identification of Stray Voltage Sources

The first set of measurements consisted of identifying stray voltage sources such as a corroded neutral or a low voltage, high impedance fault in the area. The measured data showed that these sources were not present in and around the customer houses. The next set of tests focused on measuring stray voltages due to induction from the 500 kV transmission line and those due to the load current in the neutral. NEETRAC's measurements and the prior measurements performed by the utility company identified these two sources as the main contributors for the stray voltage problem on the tap line.

Prior to NEETRAC's involvement, the utility company had measured the stray voltages with the transmission line energized and de-energized. These measurements indicated that the induction from the 500 kV transmission line contributed approximately 73% and the load current in the neutral contributed the rest. The computer study provided more insight into the nature of these two stray voltage sources

Manuscript received April 11, 2005. This work was supported by the Georgia Transmission Corporation. S. G. Patel (e-mail: Shashi.Patel@neetrac.gatech.edu) Frank C. Lambert (e-mail: Frank.Lambert@neetrac.gatech.edu) and are with the National Electric Energy Testing Research and Applications Center (NEETRAC) who performed the subject work. NEETRAC is a Center of The Georgia Institute of Technology.

duplicate

0-7803-9193-4/06/$20.00 ©2006 IEEE.

and also helped understand the relationship between them. Understanding this relationship aided NEETRAC in recommending appropriate mitigation means.

Figure 1 shows the computer model used for the analysis. A total of five different operation scenarios, as listed below, were studied:

1. 500 kV line opened at TSub-A only *
2. 500 kV line opened at TSub-B only *
3. 500 kV line opened at both substations *
4. Distribution line de-energized with the 500 kV line carrying full load
5. Distribution and 500 kV lines carrying full load (Base Case)

* Distribution line de-energized

Figure 1 also shows the neutral currents and N-E voltages at key locations for the five scenarios described above. Comparing the base case data (Scenario 5) with the data for other operating scenarios helped determine the contributions made by various stray voltage sources.

The data in Figure 1 indicates that the N-E voltages along the tap line are almost entirely dictated by the load flow in the 500 kV transmission line. The phase angle difference between the voltage caused by the induction and that caused by the distribution loads is such that the latter source has virtually no influence in the net N-E voltage at the customer's premise. For example, the "base case" N-E voltage at the customer's premise is 14.3 volts. This N-E voltage includes the contribution made by various loads on the distribution system. When the entire distribution system is de-energized, the N-E voltage at the customer's premise remains almost the same, 14.5 volts.

V. MITIGATION

The next step consisted of evaluating several mitigation means for their effectiveness in reducing the stray voltage at the customer's premise. In each case, the mitigation effectiveness was determined by comparing the corresponding stray voltage with that for the "base case".

The following mitigation methods were evaluated:

1. Isolating the primary neutral from the secondary neutral at the customer's transformer.
2. Moving the distribution tap line 2,500 feet from the transmission line.
3. Installing a 5 Ω ground well at each pole along the distribution tap line.
4. Bringing an additional two phases to the customer's transformer and balancing the load.
5. Installing a continuous counterpoise, 2/0 copper conductor, along the distribution tap line and connecting to the downlead at each pole.
6. Installing primary isolation transformers along the distribution tap line.

With the exception of Mitigation #5 (continuous counterpoise along the distribution tap line), all of the mitigation means were evaluated with the computer model. Because the software used for this investigation is not capable of modeling a continuous counterpoise in a mutually coupled system, this evaluation consisted of installing the counterpoise along the tap line and measuring the N-E voltages.

<u>Mitigation Methods 1 through 4 (Neutral Isolation, Tap Relocation, 5 Ω Pole Ground, and Three Phase Tap Line)</u>

For an individual customer, the most effective mitigation means is isolation of the primary neutral from the secondary neutral at the customer's transformer. The utility company had initially installed neutral isolators at the customer's transformers. During maximum loading conditions, the voltages across the blockers were exceeding their ratings, thereby rendering them ineffective. The blockers were then replaced with 3 kV surge arresters.

Following installation of surge arresters, stray voltages at the houses reduced to extremely low values. The computer data also showed that the "base case" N-E voltage at the customer's premise reduced from 14.3 volts to 0.01 volts. However, the N-E voltage on the primary side increased from 14.3 volts to 15.7 volts. This voltage appears at the neighboring houses which are not protected with neutral isolators. In general, the increase in the N-E voltage on the primary side following the neutral isolation is in inverse proportion to the resistance of the grounding system at the customer's house.

Minimizing induction from the transmission line as a mitigation means was also studied. One approach to reduce induction is to move the distribution tap line away from the 500 kV transmission line. In addition to increasing the separation distance between parallel line sections, the effectiveness of this mitigation method also depends on the soil resistivity values in the area. The soil resistivity along the distribution tap line, as determined in the past investigations, is extremely high. As a result, it was anticipated that the tap line would have to be relocated a significant distance from its present location for the desired reduction in induced voltage.

The computer analysis indicated that the distribution tap line would have to be relocated approximately 2,500 feet from the 500 kV transmission line to reduce the "base case" N-E voltage at the customer's premise by 40%. In addition to the cost, this solution was also impractical to implement due to its adverse effects on the customers that are presently served by the distribution tap line.

Installing a low resistance ground at each pole along the entire length of the distribution tap line was also analyzed. The computer study indicated that installing a ground well with approximately 5Ω resistance at each pole could reduce the customer's N-E voltage by 40%.

duplicate

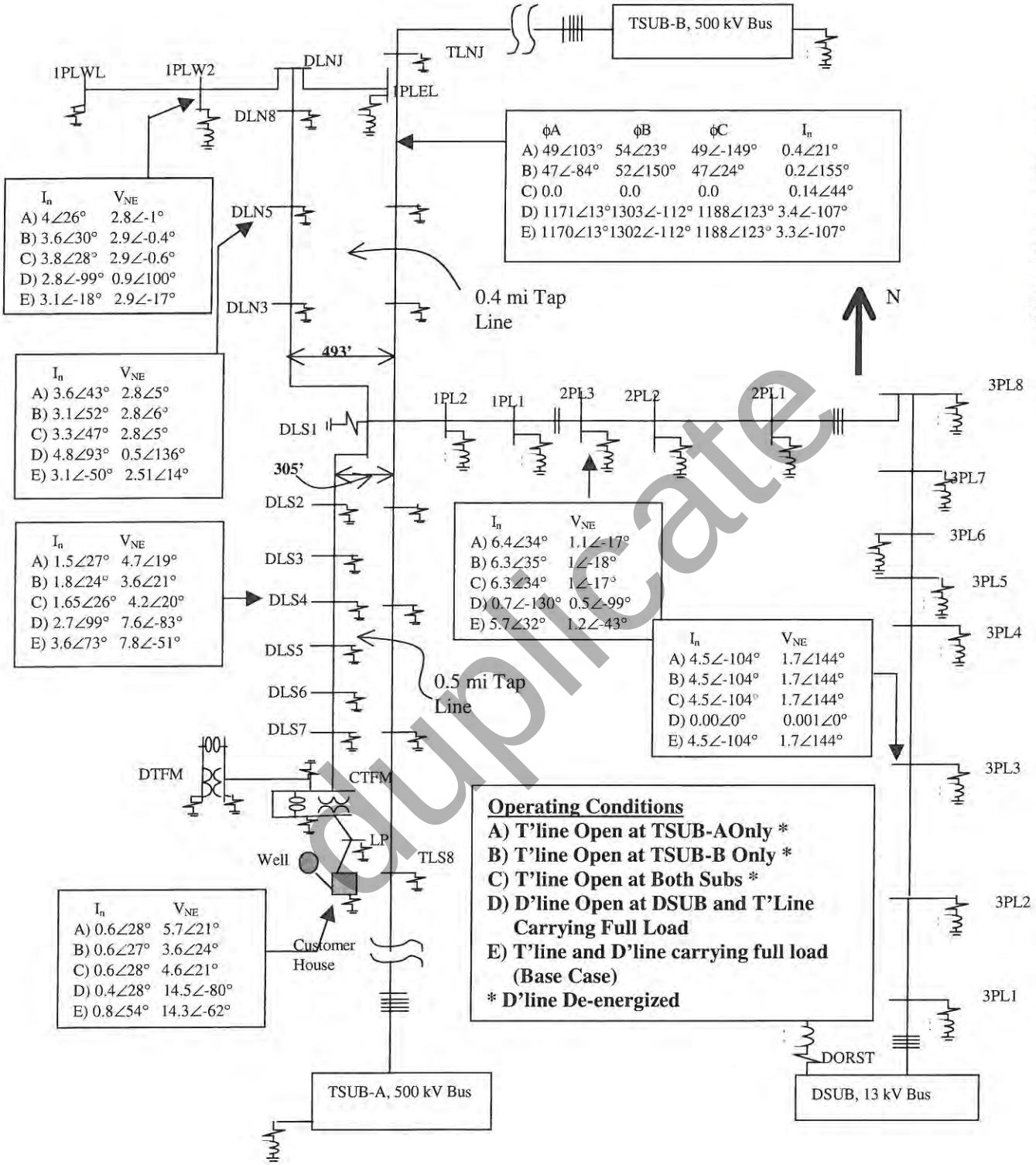

duplicate

2013 JUL -2 AM 10:00
RECEIVED
DOR-BLM
CHEYENNE WYOMING

Figure 1: Distribution System Neutral Currents and N-E Voltages due to Various System Operating Conditions - Source Identification

Drilling eight ground wells, one at each pole, is an expensive solution. Also, there is no guarantee that the goal of achieving 5Ω resistance at each pole can be met in high resistivity, sandy soil.

Since the distribution load provides only a small contribution to the stray voltage problem, bringing in an additional two phases to the customer's transformer and balancing the load was not expected to offer much improvement. The computer analysis confirmed this conclusion. The N-E voltage at the customer's premise actually increased from 14.3 volts to 16.3 volts when the entire distribution tap line was modeled as a three phase line with nearly equal loads on each phase.

Mitigation Method 5 (Continuous Counterpoise)

Although installing 3 kV surge arresters effectively solved the stray voltage problem, the utility company had concern regarding future load growth, particularly in the area beyond the customer's house. This and safety related concerns for using 3 kV surge arresters for isolation prompted the utility company to look for mitigation means that could reduce the influence of induced voltage and current along the distribution tap line. In response to this need, NEETRAC recommended installation of a continuous counterpoise (2/0 bare copper conductor) along the distribution tap line. Due to modeling limitations, the effectiveness of this solution could not be evaluated.

The utility company installed the continuous counterpoise from the customer's transformer (CTFM) to the pole at DSL for evaluation (Figure 1). This counterpoise was connected to the downlead at each pole along the tap. Additional ground rods were also installed and connected to the counterpoise at each pole. The voltage measurements obtained at the customer's transformer following the installation of the counterpoise showed no improvement. The utility personnel measured 15.5 volts from the transformer ground to a remote probe and 16.5 volts across the surge arrester providing the neutral isolation.

Mitigation Method 6 (Isolation Transformers along the Distribution Tap Line)

The induced voltage is directly proportional to the length of the parallel lines. In the present case, approximately one mile of single phase distribution tap line parallels the 500 kV transmission line. Breaking up the total length of the parallel section into one or more smaller sections should reduce the induced voltage on each section. This mitigation method was analyzed using the computer model. A field installation including the measurements followed this computer analysis. Figure 2 shows the neutral currents and N-E voltages at some key locations for four different combinations of isolation transformers and their locations between the customer transformer and the tap point (DSL1). Note that the mitigation effectiveness of each transformer / location combination can be determined by comparing the corresponding N-E voltage with the "base case" N-E voltage.

Referring to Figure 2, the isolation transformer at DLS5 reduces the N-E voltage at the customer transformer significantly. However, N-E voltages increase between DLS5 and DLS1. Placing an additional transformer at DLS1 reduces these N-E voltages.

NEETRAC and the utility company involved felt that field tests should be performed to validate the effectiveness of isolation transformers as indicated in Figure 2. Since isolation transformers for primary system applications are not routinely manufactured, obtaining such a transformer with short notice was difficult. The field tests, as a result, were performed by installing two 7.6kV/240-120V, 50 kVA transformers connected back-to-back. The transformers were mounted on a wood pole at DLS1.

Table 1 shows the N-E voltages measured at the customer's transformer, both with and without the isolation transformers connected at DLS1. For comparison, the table also shows the computed data.

Referring to Table 1, isolation transformers located at DLS1 reduce the N-E voltage between the customer's primary pole ground to a remote probe from 14.7 volts to 5.3 volts, a 64% reduction. A similar reduction was recorded in the N-E voltage across the secondary neutral isolator (3 kV surge arrester) at the customer's transformer.

For an isolation transformer to be effective, the telephone or cable TV shield wires must not be continuous across the transformer. Table 1 shows that the computed data are in good agreement with the measured data once the telephone shield wires were isolated across the transformers.

Table 1 Validation of Isolation Transformer Effectiveness – Two 7.6kV/120-240V Transformers Installed Back-to-Back at DLS1 (Figure 2)

Test Scenario	Measured V_{NE} (Volts)	Computed V_{NE} (Volts)
No isolation transformer (Base case)	14.7	14.3 ∠-62°
Primary isolation transformer at DLS1, telephone shield across isolation transformer continuous	8.4	Not calculated
Primary isolation transformer at DLS1, telephone shield across isolation transformer isolated	5.3	5.5 ∠-67°

duplicate

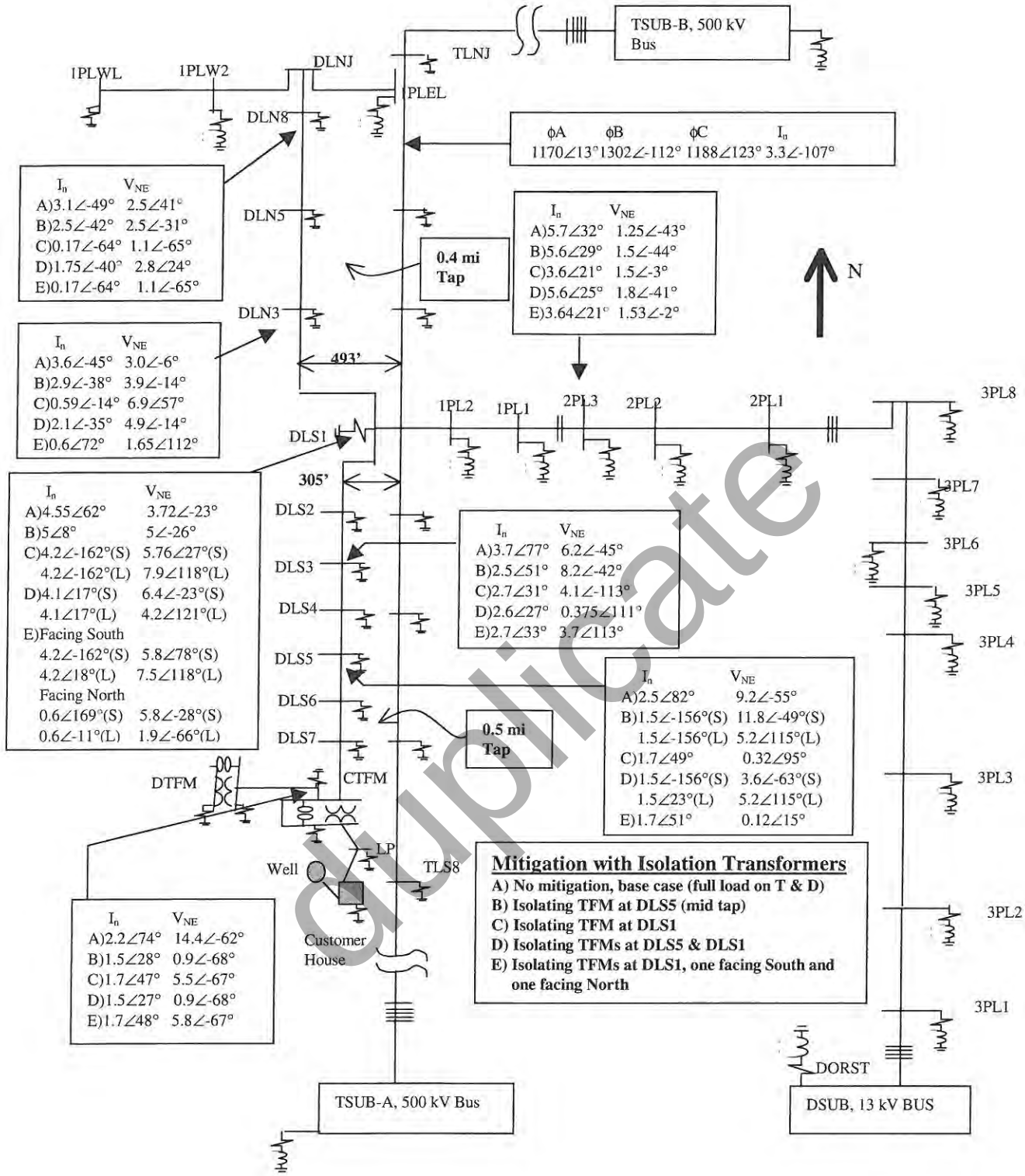

duplicate

CHEYENNE, WYOMING
BLM-DOI
RECEIVED
2013 JUL -2 AM 10: 00

Figure 2: Distribution System Neutral Currents and N-E Voltages –
Effectiveness of Isolation Transformers in Reducing Stray Voltages along the Primary

VI. Conclusions

There are several conclusions that resulted from the analysis of induced stray voltages and mitigation means performed in this project. The following is a summary of these conclusions:

1) Compared to stray voltages resulting from an unbalanced load in the neutral, stray voltages due to induction can be significantly higher. In such a case, many of the traditional mitigation means (balanced load on three phase circuit, lowering ground resistance, increasing neutral conductor size, etc.) will not be effective.
2) The induced stray voltage problem may exist at several houses along the parallel section of the distribution line. Installing neutral isolators at these houses will solve individual stray voltage problems but will significantly increase N-E voltages at unprotected houses.
3) Installation of one or more isolation transformers along the parallel section breaks up large loops formed between the phase conductors, neutral conductor and ground into smaller loops. This, in turn, reduces the N-E voltages along the parallel section.
4) To insure the maximum effectiveness, cable and telephone grounding circuits must be isolated across the isolation transformers.

References

1) William Dick, David Winter, *Computations, Measurement and Mitigation of Neutral-to-Earth Potentials on Electrical Distribution Systems*, IEEE Transaction on Power Delivery, Vol. PWRD-2, No.2, April 1987.

2) James Donald, Claude M. Hertz, Ivan Winsett, *Results of Initial Field Installations of Magnetic Saturation Blockers for Minimization of Stray Voltage on Dairy Farms*, American Society of Agricultural Engineers, Paper No. 156-170, February 1984.

3) C. F. Dalziel, W. R. Lee, *Electric Shock Hazard*, IEEE Spectrum, Vol. 6, No.2, February 1969.

4) EPRI TR-113566, *Identifying, Diagnosing, and Resolving Residential Shocking Incidents*, Final Report, September 1999.

5) EPRI TR-106661-V1, *Distribution Grounding – Volume 1: Handbook*, Project 3066-01, Final Report, August 1996.

6) USDA Agriculture Handbook 696, *Effects of Electrical Voltage/Current on Farm Animals (How to Detect and Remedy Problems)*, December 1991.

Biography

Shashi Patel (Senior Member) was born in the Fiji Islands and grew up in India. He received a BS (EE) degree from India and MS (EE) degree from the Georgia Institute of Technology in 1976. He worked for a state owned utility company in India from 1965 to 1967 and started his career in the U.S.A. with Bonneville Power Administration, Portland, Oregon in 1969. Georgia Power Company employed him in 1970. Shashi retired from Georgia Power Company in 1995. Since that time, he has worked as a Senior Research Engineer at NEETRAC, a Center of Georgia Tech. Throughout his professional career, he has been involved in special projects covering a wide variety of areas, including power system studies, lightning and fault vulnerability investigations, high voltage testing, power system grounding, stray voltage investigations and underground corrosion.

Frank C. Lambert (Senior Member) received BEE and MSEE degrees from the Georgia Institute of Technology in 1973 and 1976, respectively. Before joining NEETRAC, Mr. Lambert was employed for twenty-two years at Georgia Power Company where his responsibilities included research, distribution automation, network underground, distribution and transmission system design, construction, operation, maintenance, and evaluation. He is currently Program Manager for Electrical Systems at NEETRAC, a Center of Georgia Tech, where his responsibilities include research and development projects related to power quality, grounding, power electronics, distributed generation, power systems analysis, and high voltage and high current testing.

duplicate

2013 JUL -2 AM 10: 00
RECEIVED
DOI-BLM
CHEYENNE WYOMING

SAWTOOTH LAW
OFFICE PLLC

ATTACHMENT

10

duplicate

2013 JUL -2 AM 10:00
RECEIVED
DOI-BLM
CHEYENNE WYOMING

National Electric Energy Testing, Research & Applications Center

NETRAC

A Research Center of the Georgia Institute of Technology

Induced Stray Voltages from Transmission Lines

Shashi Patel
Frank Lambert

duplicate

2013 JUL -2 AM 10:00
RECEIVED
DOI-BLM
CHEYENNE WYOMING

Introduction

- Conventional stray voltage sources include unbalanced loads, neutral impedances, and high earth voltage gradients.
- Non-conventional sources include triplen harmonic neutral currents and induction from nearby transmission lines.

duplicate

RECEIVED
DOI-BLM
CHEYENNE WYOMING
2013 JUL -2 AM 10: 00

Induced Stray Voltages - Parameters

- Currents in transmission lines
- Proximity to distribution line
- Length of parallel section
- Additive phase angle between induced and load currents in the grounded neutral system
- Soil resistivity

duplicate

RECEIVED
BLM
CHEYENNE WYOMING
2013 JUL -2 AM 10: 00

National Electric Energy Testing Research & Applications Center
NETRAC

2013 JUL -2 AM 10: 00
RECEIVED
DOI-BLM
CHEYENNE WYOMING

Concern

- Stray voltage on a single phase tap line (7.2 kV) caused by a 500 kV transmission line
- Parallel section – Approximately 1 mile
- Average Distribution Pole Spacing – Approximately 350'
- Approximately 14 volts at the faucet of a customer at the end of the tap line

duplicate

2013 JUL -2 AM 10: 00
RECEIVED
DOI-BLM
CHEYENNE WYOMING

Project Scope

duplicate

- NEETRAC and prior measurements
- Identification of various sources
- Computer modeling and validation with the measured data
- Performing studies to evaluate effectiveness of various stray voltage mitigation methods

2013 JUL -2 AM 10: 00
RECEIVED
DOI-BLM
CHEYENNE WYOMING

Measurements by NEETRAC

duplicate

- First set of measurements involved identifying house wiring, secondary neutral and buried 120/240 volt service related sources, if any. None was found.
- Second set of measurements included primary profiling from the substation to the customer – phase/neutral currents, NEVs and pole ground resistances

2013 JUL -2 AM 10: 00
RECEIVED
DOI-BLM
CHEYENNE WYOMING

Prior Measurements

- Prior to NEETRAC's involvement, the utility company measured stray voltages at the customer's faucet both with and without energizing the transmission line.
- The measurements indicated that the transmission line contributed approximately 73% of the total stray voltage. The remainder was produced by the load current.

duplicate

National Electric Energy Testing Research & Applications Center
NETRAC

2013 JUL -2 AM 10: 00
RECEIVED
DOI-BLM
CHEYENNE WYOMING

Computer Modeling

duplicate

- Modeled the subject feeder from the substation to the customer including the parallel transmission line.
- Validated the model by comparing the results with the measured data.
- Identified the sources by simulating various operating conditions.

Georgia Institute of Technology

101003

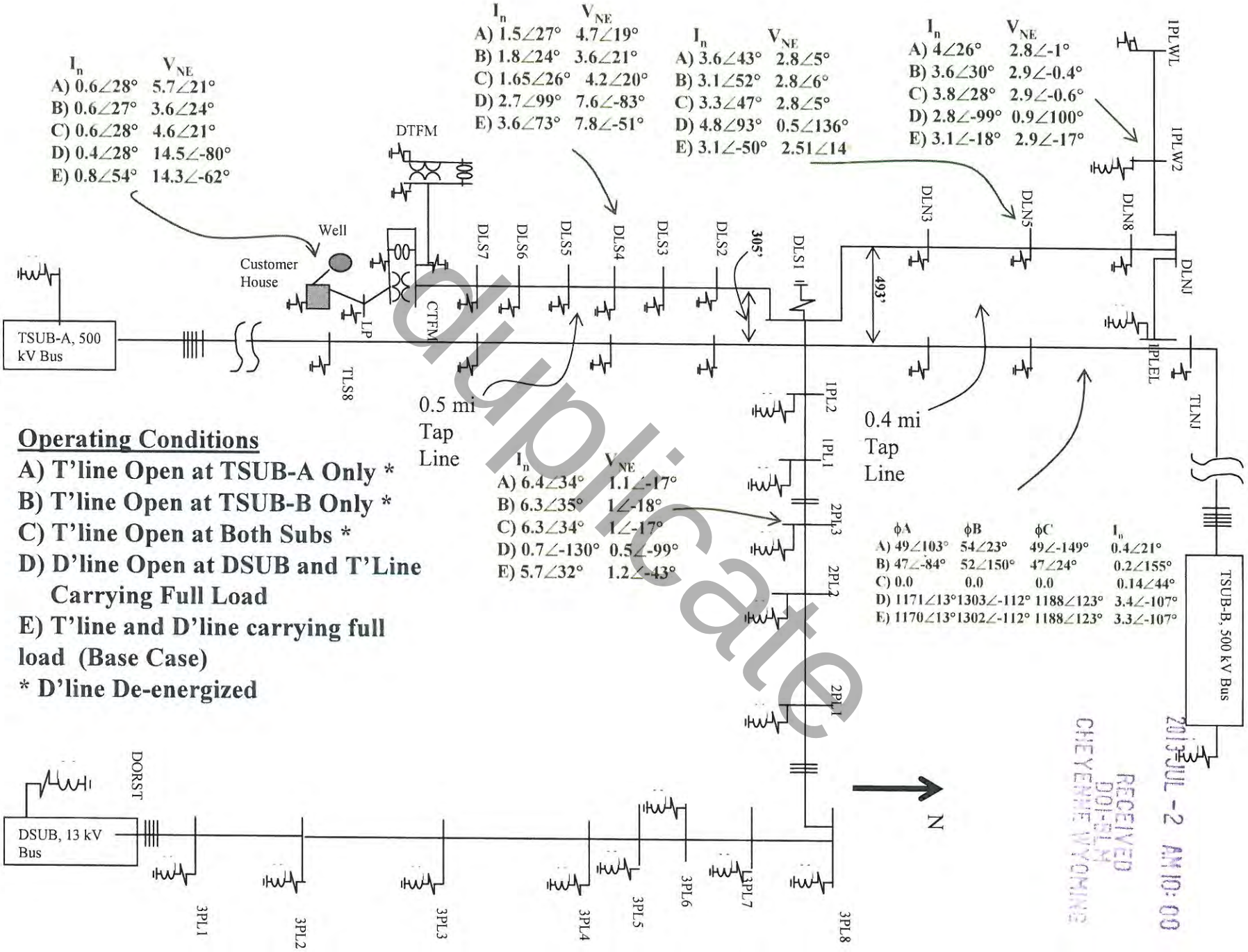

Operating Conditions

A) T'line Open at TSUB-A Only *
B) T'line Open at TSUB-B Only *
C) T'line Open at Both Subs *
D) D'line Open at DSUB and T'Line Carrying Full Load
E) T'line and D'line carrying full load (Base Case)
* D'line De-energized

duplicate

2013 JUL -2 AM 10: 00
RECEIVED
DOI-BLM
CHEYENNE WYOMING

Evaluation of Mitigation Methods

Install neutral isolators

- Initially, blocker ratings will be exceeded during high loading conditions.
- Replaced with 3 kV surge arrester with reduction in stray voltage from 14.3 volts to 0.01 volts.
- The primary NEV increased from 14.3 volts to 15.7 volts.

duplicate

2013 JUL -2 AM 10: 00
RECEIVED
DOI-BLM
CHEYENNE WYOMING

Evaluation of Mitigation Methods

duplicate

Move the tap line away

- The tap line would have to be relocated approximately 2,500' from the transmission line to reduce the stray voltage by 40%. This result is partly due to extremely high soil resistivity in the area.
- Besides the cost, this solution was impractical for existing customers.

RECEIVED
BLM-DOI
CHEYENNE WYOMING
2013 JUL -2 AM 10:00

Evaluation of Mitigation Methods

Install 5 Ohms ground well at each pole

- Study showed that the stray voltages can be reduced by 40%.
- Drilling a ground well at eight locations is expensive.
- There is no guarantee that the resistance will be reduced to 5 Ohms.

duplicate

RECEIVED
DOI-BLM
CHEYENNE WYOMING
2013 JUL -2 AM 10: 00

Evaluation of Mitigation Methods

Convert the tap to a three phase line and balance the load.

- The NEV at the customer's transformer pole increased from 14.3 volts to 16.3 volts.

duplicate

2013 JUL -2 AM 10:00
RECEIVED
DOI-BLM
CHEYENNE WYOMING

Evaluation of Mitigation Methods

duplicate

Install isolation transformers on the tap line

- Breaks the length of the parallel section
- Effective solution for the entire tap
- Cable TV or telephone shields across the isolation transformers must be isolated to increase mitigation effectiveness.
- Proper fuse coordination is required.

RECEIVED
DOI-BLM
CHEYENNE WYOMING
2013 JUL -2 AM 10: 00

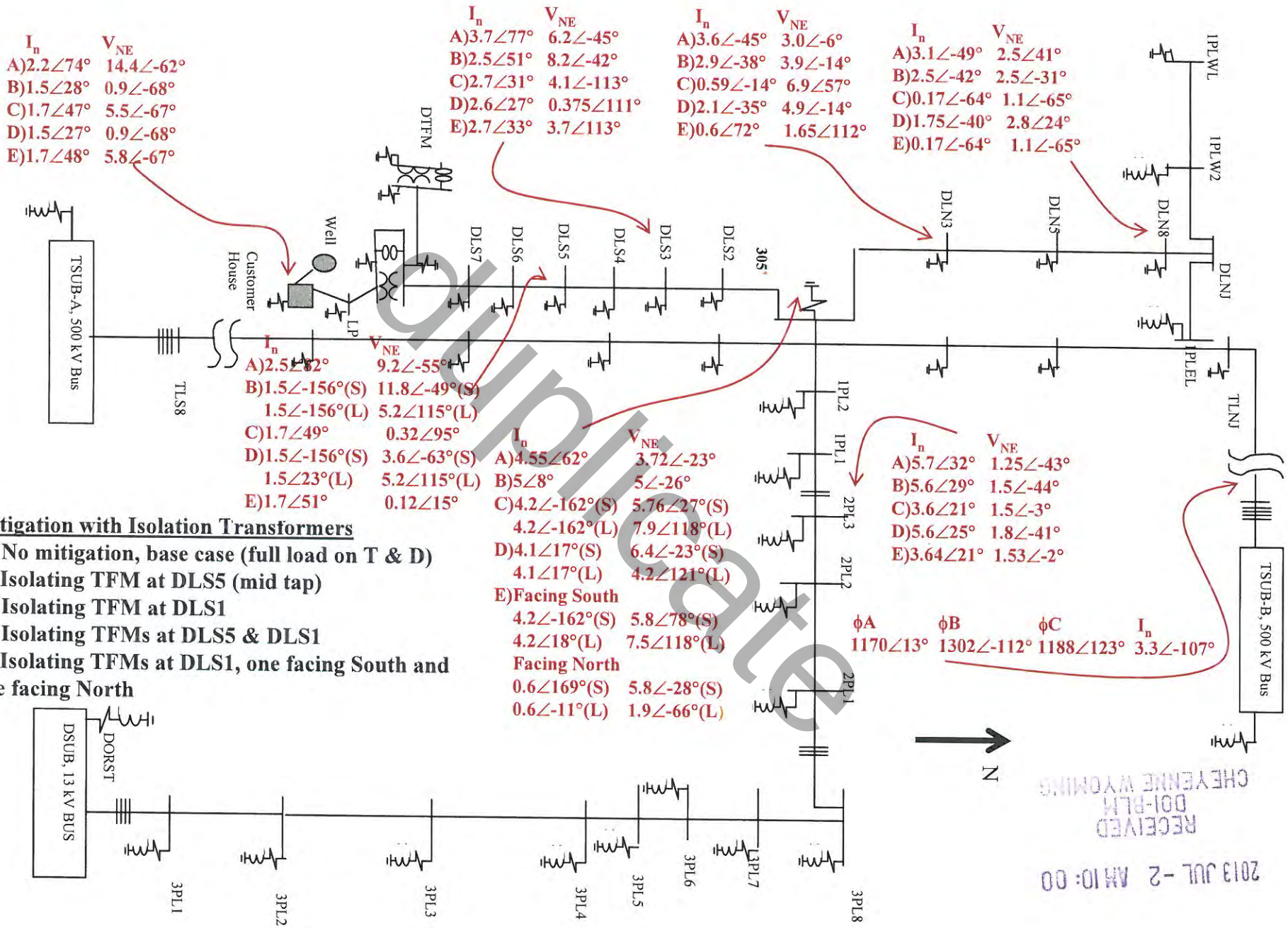

Mitigation with Isolation Transformers

A) No mitigation, base case (full load on T & D)
B) Isolating TFM at DLS5 (mid tap)
C) Isolating TFM at DLS1
D) Isolating TFMs at DLS5 & DLS1
E) Isolating TFMs at DLS1, one facing South and one facing North

duplicate

RECEIVED
BLM-DOI
CHEYENNE WYOMING
2013 JUL -2 AM 10:00

National Electric Energy Testing Research & Applications Center NETRAC

2013 JUL -2 AM 10: 00
RECEIVED
DOI-BLM
CHEYENNE WYOMING

Conclusions

- Stray voltages due to induction can be significantly higher compared to those due to load currents.
- Stray voltages due to induction are typically spread along the parallel section serving several customers.
- Most of the traditional mitigation means will not be effective.

duplicate

Georgia Institute of Technology

101003

2013 JUL -2 AM 10: 00
RECEIVED
DOI-BLM
CHEYENNE WYOMING

Conclusions

- Installation of one or more isolation transformers along the parallel section is an effective solution for the customers served by the tap.
- For effective mitigation, Cable TV and telephone shields must be isolated across the isolation transformers.

duplicate

101003

Sawtooth Law Offices, PLLC
PO Box 7985
Boise, ID 83707

Bureau of Land Management
Gateway West Project
PO Box 20879
Cheyenne, WY 82003

duplicate

Donald J. Chisholm
Attorney at Law
223 East Main Street
P.O. Box 1118
Burley, Idaho 83318
Telephone (208) 678-9181
Fax: (208) 878-4998
Email: chisholm@pmt.org

2013 JUN 27 AM 10: 00
RECEIVED
DOI-BLM
CHEYENNE WYOMING

June 25, 2013

Bureau of Land Management
Gateway West Project
P.O. Box 20879
Cheyenne, Wyoming 82003

Re: Objections of Merlin H. Jones and Jones and Widerburg Farms to location of Gateway West Proposed Transmission Line in Sections 8, 9, 10, 11 and 12 in Township 10 South Range 28 East of the Boise Meridian, Cassia County, Idaho and Section 7 in Township 10 South Range 29 East of the Boise Meridian, Cassia County, Idaho

Dear Sir or Madam:

Merlin H. Jones, who owns properties in the sections identified above and his children who own Jones and Widerburg Farms have asked me to submit the following comments and objections to the proposed route for the Gateway West Transmission Line Segment 7 shown on Map 68 of 121 dated May 31, 2013.

Portions of the property owned by Merlin H. Jones are dry land which are used for production of grain crops. Other portions are irrigated with pivot irrigation systems. The parcel owned by Jones and Widerburg Farms in Sections 8 and 17 of Township 10 South Range 28 East of the Boise Meridian are irrigated with center pivot irrigation systems. Having land condemned for overhead transmission lines through the respective parcels of property on the proposed route would have a significant impact on the efficiency of their farming operations.

The Jones family would not object to the location of the transmission line along the proposed route if the transmission line were buried, so that farming operations wouldn't have to be disturbed, except for installation and occasional maintenance of

the buried transmission line.

There is a significant need to preserve the world's capacity for production of food to support the world's population. Taking farm land out of production is not in the long-term best interest of the United States. It would inhibit the ability of the United States to feed its population, and it has economic impacts in the form of reduced employment and reduced income to the owners and taxes to local units of government.

In instances in which overhead power lines would require that pivot irrigation systems be modified or eliminated, the power line will result in substantial loss of production or increased labor cost of irrigation by alternate means. If the power lines were buried where it crosses agricultural lands, that problem would be eliminated. Overhead power lines will also adversely affect aerial spraying crops by making operations more costly per acre and less safe.

Burying the lines may be more costly initially, but the maintenance and replacement costs should be substantially reduced.

Compensating a farmer for the land which is "taken" and the severance damages based on current market values does not adequately compensate for the increased cost of operation of the remaining ground. Overhead power lines create areas which will be infested with weeds and will create potential fire hazards for adjacent grain crops.

The Idaho Department of Fish & Game has identified areas where Columbian Sharp Tailed Grouse have active dancing grounds. Enclosed are a copy of a letter to Kendall Jones dated May 20, 2009, regarding Sharp Tailed Grouse and a color copy of a map showing active dancing grounds for Sharp Tailed Grouse. They are identified in pink dots. It is well known that the overhead power lines create perches for raptors which prey upon the grouse population.

On behalf of Merlin H. Jones and Jones and Widerburg Farms we respectfully request that the proposed route be abandoned or that the line be buried where it crosses agricultural lands.

RECEIVED
DOI-BLM
2013 JUN 27 AM 10:00

Very Truly Yours,

Donald J. Chisholm

nw
Ec: letter and map
Cc: Kendall Jones

2013 JUN 27 AM 10: 00
RECEIVED
BOI-BLM
CHEYENNE WYOMING

IDAHO DEPARTMENT OF FISH AND GAME
MAGIC VALLEY REGION
324 South 417 East, Suite 1
Jerome, Idaho 83338

2013 JUN 27 AM 10: 00
RECEIVED
DOI-BLM
CHEYENNE WYOMING

C.L. "Butch" Otter / Governor
Cal Groen / Director

May 20, 2009

Kendall Jones
154 North 100 East
Rupert, Idaho 83350

Dear Kendall,

On behalf of the Idaho Department of Fish and Game, I would like to thank you for your assistance in Idaho's Columbian sharp-tailed grouse translocation project. This project is part of a multi-state effort to reestablish Columbian sharp-tailed grouse populations in portions of their historic range where suitable habitat still exists. Your cooperation in allowing us to trap grouse from the dancing ground on your private property is greatly appreciated and is key to the success of this project.

Columbian sharp-tailed grouse, once abundant throughout southern Idaho and other western states, are presently found in less than 30% of their historical range. In Idaho, sharp-tail populations have increased substantially over the past 20 years primarily from the abundant, high quality habitat provided by lands enrolled in the Conservation Reserve Program. These healthy, increasing grouse populations are providing a convenient source of birds for recovery efforts throughout the west.

Thanks to you and other private landowners our trapping efforts since 1991 have resulted in providing 1,266 sharp-tailed grouse for releases in four western states, including 582 grouse that have been released in southern Twin Falls County. So far, the results from the Idaho releases have been very encouraging. The birds are spreading out and occupying new areas, and at least four active dancing grounds have been established.

This year a total of 57 sharp-tailed grouse were trapped; 54 from the Heglar Canyon area and 3 from the Rockland Valley. It is our hope to keep the sharp-tailed grouse trap and transplant program active as long as Idaho's populations remain strong. We will be moving Columbian sharp-tails into new areas of Idaho next year.

As a small token of our appreciation, enclosed is beautiful piece of sharp-tail art created L. Inez Alcazar-Hagen, an Oregon based artist, and DVD of dancing Columbian sharp-tailed grouse made in the Rockland Valley in April 1996.

Again, thanks for your cooperation. You may hear from us again next year as trapping season approaches. If you would like to spend a morning trapping grouse or if you have any questions about the program, please feel free to give me a call at 208-324-4350.

Sincerely,

Randall B. Smith
Regional Wildlife Manager

Sincerely,

Megan Schwender
Wildlife Technician

2013 JUN 27 AM 10: 00
RECEIVED
DOI-BLM
CHEYENNE, WYOMING

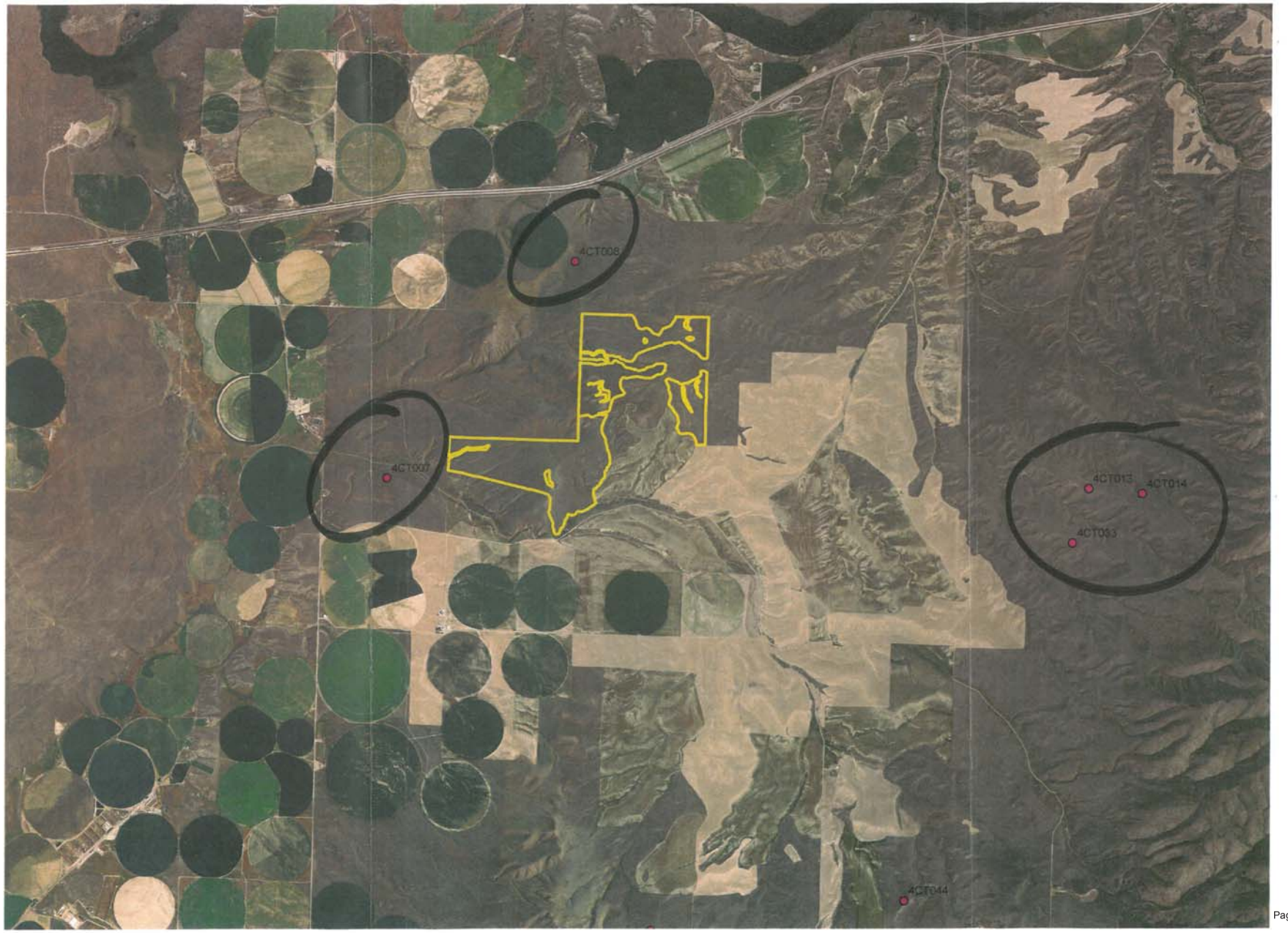
4CT006
4CT007
4CT013
4CT014
4CT033
4CT044