LUDLUM MODEL 3
SURVEY METER

June 2007

Serial Number 239543 and Succeeding

Serial Numbers

LUDLUM MODEL 3
SURVEY METER

June 2007

Serial Number 239543 and Succeeding

Serial Numbers

LUDLUM MEASUREMENTS, INC.
501 OAK STREET, P.O. BOX 810
SWEETWATER, TEXAS 79556
325-235-5494, FAX: 325-235-4672

REV #	ALTERATIONS	DATE	BY
1	VALID	12/21/05	DDW
2	REDESIGNED BATTERY LID ARTWORK	8/11/06	CMC

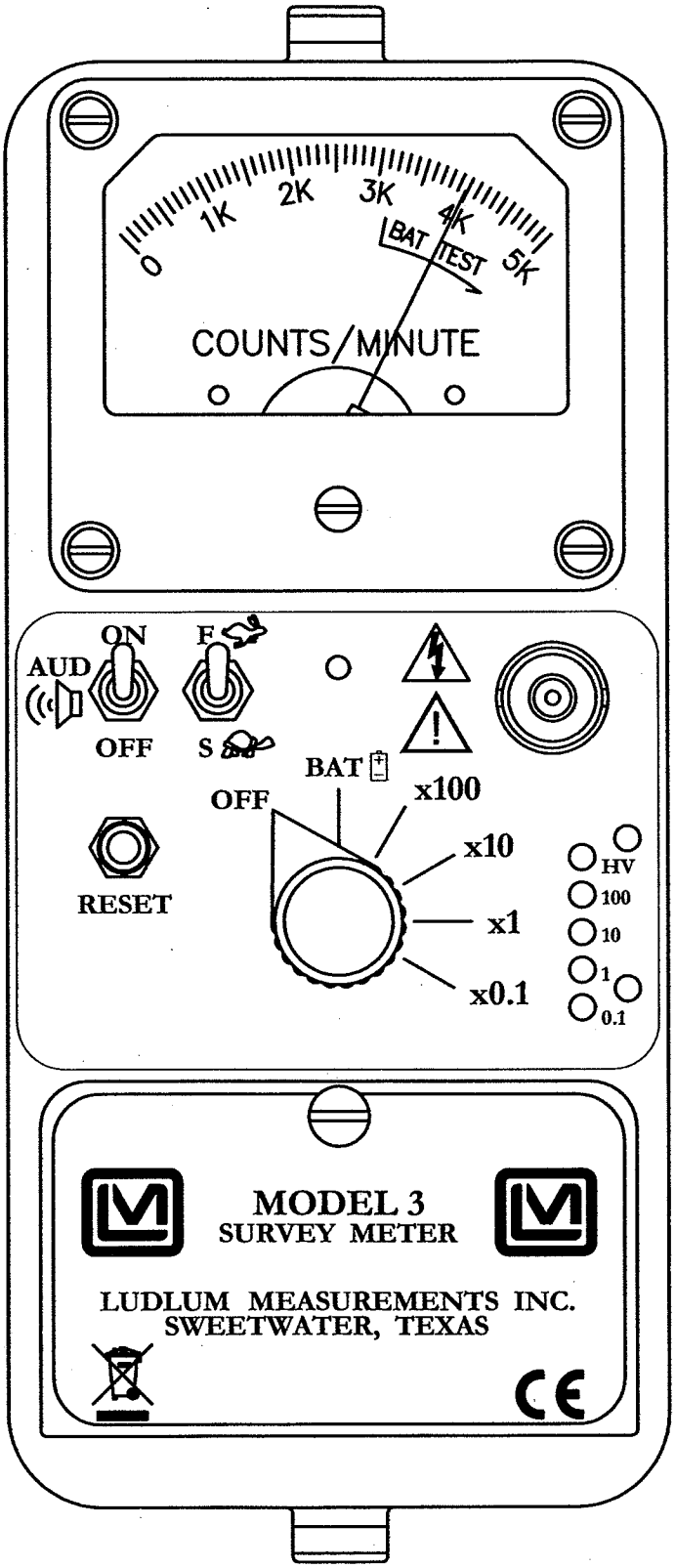

DWN	DATE	CHK	DATE	APP	DATE
CMC	8-11-06			VBW	8-14-06

DWG NUM: 4464-041 SCALE: FULL ☒ OTHER

TITLE M 3 FRONT PANEL

LUDLUM MEASUREMENTS, INC.
501 OAK STREET
SWEETWATER, TEXAS 79556

SERIES	SHEET
464	41A

Table of Contents

Introduction **1**

Getting Started **2**

Unpacking and Repacking **2-1**

Battery Installation **2-1**

Connecting a Detector to the Instrument **2-2**

Battery Test **2-2**

Instrument Test **2-2**

Reading the Meter Face Dial **2-3**

Operational Check **2-6**

Specifications **3**

Identification of Controls and Functions **4**

Safety Considerations **5**

Environmental Conditions for Normal Use **5-1**

Warning Markings and Symbols **5-1**

Cleaning and Maintenance Precautions **5-2**

Calibration and Maintenance **6**

Calibration **6-1**

Exposure Rate Calibration **6-1**

CPM Calibration **6-2**

Establishing an Operating Point **6-3**

Maintenance **6-4**

Recalibration **6-4**

Batteries **6-5**

Troubleshooting **7**

Troubleshooting Electronics which utilize a G-M Detector or Scintillator **7-1**

Troubleshooting G-M Detectors **7-3**

Troubleshooting Scintillators **7-4**

Technical Theory of Operation ***8***

Low Voltage Supply **8-1**

High Voltage Supply **8-1**

Detector Input **8-1**

Amplifier **8-1**

Discriminator **8-2**

Audio **8-2**

Scale Ranging **8-2**

Meter Drive **8-2**

Meter Reset **8-2**

Fast/Slow Time Constant **8-2**

Recycling ***9***

Parts List ***10***

Model 3 Survey Meter **10-1**

Main Board, Drawing 464 × 204 **10-1**

Wiring Diagram, Drawing 464 × 212 **10-3**

Drawings and Diagrams ***11***

Section 1

Introduction

The Model 3 is a portable radiation survey instrument with four linear ranges used with exposure rate or cpm (counts per minute) meter dials or a combination of both, exposure rate and count rate (referred to as "combo") meter face dials. The instrument features a regulated high-voltage power supply, unimorph speaker with audio ON-OFF capability, fast-slow meter response, meter reset button and a six-position switch for selecting battery check or scale multiples of ×0.1, ×1, ×10 and ×100. Each range multiplier has its own calibration potentiometer. The unit body and meter housing are made of cast aluminum and the can is 0.090" thick aluminum.

The audio provides a brief "click" for every radiation event detected. It also provides a steady tone to warn the user of a low battery condition. This low battery warning overrides the position of the AUD ON-OFF switch.

Any Geiger-Mueller (G-M) detector offered by Ludlum Measurements will operate with this unit as well as any scintillation type detector. The instrument is typically set at 900 volts for G-M tube operation. For special requirements of G-M or scintillation detectors, the instrument high voltage may be adjusted from 200 to 1500 volts.

The unit is operated with two "D" cell batteries for operation from –4°F (–20°C) to 122°F (50°C). For instrument operation below 32°F (0°C) either very fresh alkaline or rechargeable NiCd batteries should be used.

Section 2

Getting Started

Unpacking and Repacking

Remove the calibration certificate and place it in a secure location. Remove the instrument and accessories (batteries, cable, etc.) and ensure that all of the items listed on the packing list are in the carton. Check individual item serial numbers and ensure calibration certificates match. The Model 3 serial number is located on the front panel below the battery compartment. Most Ludlum Measurements, Inc. detectors have a label on the base or body of the detector for model and serial number identification.

Important!

If multiple shipments are received, ensure that the detectors and instruments are not interchanged. Each instrument is calibrated to specific detector(s), and therefore not interchangeable.

To return an instrument for repair or calibration, provide sufficient packing material to prevent damage during shipment. Also provide appropriate warning labels to ensure careful handling. Include detector(s) and related cable(s) for calibration. Include brief information as to the reason for return, as well as return shipping instructions:

- **Return shipping address**
- **Customer name or contact**
- **Telephone number**
- **Description of service requested and all other necessary information**

Battery Installation

Ensure the Model 3 range selector switch is in the OFF position. Open the battery lid by pushing down and turning the quarter-turn thumbscrew

counterclockwise ¼ turn. Install two "D" size batteries in the compartment.

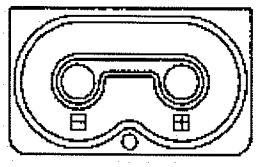

Note the (+) and (-) marks inside the battery door. Match the battery polarity to these marks. Close the battery box lid, push down and turn the quarter-turn thumb screw clockwise ¼ turn.

Note:

The center post of a "D" size battery is positive.

Connecting a Detector to the Instrument

Caution!

The detector operating voltage (HV) is supplied to the detector via the detector input connector. A mild electric shock may occur if you make contact with the center pin of the input connector. Switch the Model 3 range selector switch to the OFF position before connecting or disconnecting the cable or detector.

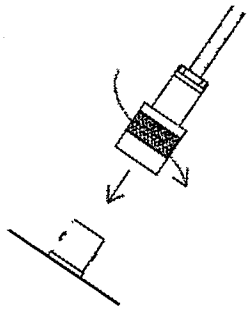

Connect one end of a detector cable to the detector by firmly pushing the connectors together while twisting clockwise ¼ turn. Repeat the process in the same manner with the other end of the cable and the instrument.

Battery Test

Check the batteries daily or prior to use, whichever is less frequent, to assure proper operation of the instrument. Move the range multiplier switch to the BAT position. Ensure that the meter needle deflects to the battery check portion on the meter scale. If the meter does not respond, check to see if the batteries have been correctly installed. Replace the batteries if necessary.

Instrument Test

After checking the batteries, turn the instrument range switch to the X100 position. Place the AUD ON-OFF switch in the ON position. Expose the detector to a check source. The instrument speaker should emit "clicks" relative to the rate of counts detected. The "AUD ON/OFF" switch will silence the audible clicks if in the OFF position. It is recommended that the

"AUD ON/OFF" switch be kept in the OFF position when not needed in order to preserve battery life.

The detector cable can be a source of problems. Test the detector cable by bending or flexing either end of the cable and checking for an increase of counts detected. Replace the cable if increases in the rate of counts are detected.

Check the meter reset function by depressing the "RES" pushbutton switch and ensuring the meter needle drops to "0".

Once this procedure has been completed, the instrument is ready for use.

Reading the Meter Face Dial

Reading the meter face is very important for consistent measurements. There are, in general, three types of meter faces: 1) count rate (typically cpm – counts per minute) 2) exposure rate (typically mR/hr) and 3) "combo" (typically cpm and mR/hr.) The following examples are intended to help the user interpret the correct reading.

The normal procedure is to turn the range selector switch to the highest range and if no readings are seen on the meter, turn the selector switch down to the lower scales until a reading is seen. The ranges on the instrument selector switch are multipliers for the meter reading. A typical single scale (one arc) meter face with a cpm (counts per minute) dial is shown below.

The count rate scale reads 0-5K COUNTS/MINUTE (kcpm or 1000's of counts per minute) and has BAT TEST on the dial.

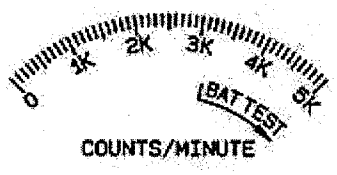

If the needle is pointing as indicated below and the instrument range selection switch is on the ×0.1 scale multiple, then the reading is 3.5 kcpm (multiplied by) ×0.1 = 350cpm.

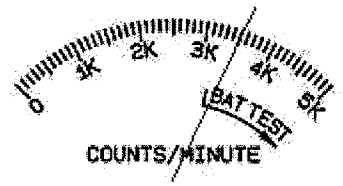

The same needle indications on successive ranges would be:

×1 = 3.5 kcpm (or 3,500 cpm)

×10 = 35 kcpm (or 35,000 cpm)

×100 = 350 kcpm (or 350,000 cpm)

A typical dual scale (two arcs) meter face is shown below. The top scale reads 0-2 mR/hr. The bottom scale also reads 0-2 mR/hr and is for ×100 only scale. The ×100 ONLY scale will work correctly when the multiplier switch is in the ×100 range. The meter face also has a BAT TEST position on the dial.

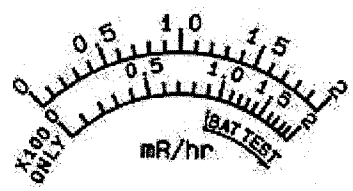

If the needle is pointing as indicated below and the range selection switch is on the ×0.1 scale, then the reading is 0.1 mR/hr.

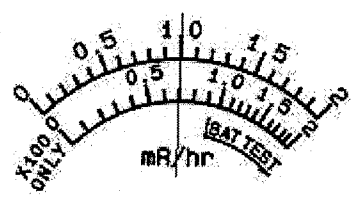

The same needle indications on successive ranges would be:

×1 = 1.0 mR/hr (or 1,000 μR/hr)

×10 = 10 mR/hr (or 10,000 μR/hr)

×100 = 70 mR/hr (or 70,000 μR/hr)

The dial shown below has three arcs: a counts per minute scale (cpm), a linear mR/hr scale, and a non-linear mR/hr scale for the ×100 range only. The meter face also has a BAT TEST position.

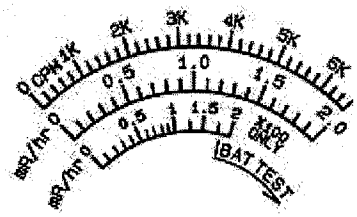

The top cpm scale is valid for the ×0.1, ×1, ×10 and the ×100 ranges. The linear (middle) mR/hr scale is valid for the ×0.1, ×1 and×10 ranges. The non-linear mR/hr scale is valid for the ×100 range only. This meter face is commonly referred to as a "combo" meter face, since it has both, count rate (cpm) and exposure rate (mR/hr) arcs. Simpler meter faces may only have a count rate or an exposure rate arc(s) like the previous meter faces shown.

A "combo" meter face is specifically designed for a particular detector. In the example above, the 1.0 mR/hr mark on the middle arc lines up with 3.3kcpm on the upper arc. The meter face in this example works with a detector that receives 3.3kcpm per mR/hr (the Ludlum Model 44-9 pancake detector.)

In the following picture, the needle is on the first tick mark past the 4kcpm mark. Therefore, if the instrument selector switch is on the ×0.1 range, the reading is 4.2kcpm (multiplied by) ×0.1 = 420cpm.

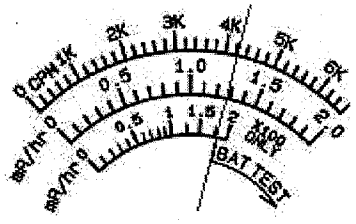

The same needle indications on successive ranges would be:

×1 = 4.2kcpm (or 4,200 cpm)

×10 = 42kcpm (or 42,000 cpm)

×100 = 420kcpm (or 420,000 cpm)

If you use the mR/hr scales, then the readings would be:

×0.1 = 0.13 mR/hr

×1 = 1.3 mR/hr

×10 = 13 mR/hr

×100 = 180 mR/hr*

Note:

*This reading is using the bottom (non-linear) scale.

Many different dials are available, but each can be used as described above.

Operational Check

To assure proper operation of the instrument and detectors(s) between calibrations, an instrument operational check including battery test and instrument test (as described on pages 2-2 and 2-3) should be performed at least daily or prior to use, whichever is less frequent. A reference reading (or readings) with a check source should be obtained with the detector(s) in a constant and reproducible manner at the time of calibration or at the time the instrument is received in the field.

If at any time the instrument fails to read within 20% of the reference reading when using the same check source, it should be sent to a calibration facility for recalibration and/or repair. If desired, multiple readings may be taken at different distances and/or with different sources so that other ranges or scales are checked.

Section 3

Specifications

Power: two "D" cell batteries housed in a sealed externally accessible compartment.

Battery Life: typically greater than 2000 hours with alkaline batteries and with the AUD ON-OFF switch in the OFF position.

End-of-Battery Life Warning: At 2.1 Vdc the meter needle will drop to the edge of the BAT TEST or BAT OK area when the meter selector switch is moved to the BAT position. At 2.0 Vdc a steady audible tone will be emitted to warn the user of the low battery condition.

High Voltage: adjustable from 400 to 1500 volts.

Threshold: fixed at 40 mV ± 10 mV.

Meter: 2.5" (6.4 cm) arc, 1 mA analog type.

Meter Dial: 0-2 mR/hr, or 0-5k cpm, BAT TEST (others available).

Multipliers: ×0.1, ×1, ×10, ×100.

Range: typically 0-200 mR/hr, or 0-500,000 counts/minute (cpm).

Linearity: reading within 10% of true value with detector connected.

Battery Dependence: less than 3% change in readings to battery failure indication.

Calibration Controls: individual potentiometers for each range; accessible from front of instrument (protective cover provided).

Audio: built-in unimorph speaker with ON-OFF switch (greater than 60 dB at 2 feet).

Response: toggle switch for fast (4 seconds) or slow (22 seconds) from 10% to 90% of final reading.

Reset: pushbutton to zero the meter.

Connector: series "C" (other available).

Size: 6.5" (16.5 cm) H × 3.5" (8.9 cm) W × 8.5" (21.6 cm) L.

Weight: 3.5 lbs. (1.6 kg) including batteries.

Construction: cast and drawn aluminum with beige powder-coat

Cable: 39-inch with "C" connector (others available).

Section 4

Identification of Controls and Functions

See the Model 3 FRONT PANEL drawing at the beginning of this manual to reference the following controls:

Meter: 2.5" (6.4cm) arc, 1 mA analog type with pivot-and-jewel suspension. Typical meter dials are 0-2 mR/hr, 0-20 μSv/h, 0-5k cpm or combination of exposure rates (0-2 mR/hr or 0-20 μSv/h) and cpm and BAT TEST.

Connector: Used to connect the detector to the instrument. Typically series "C" but can be "BNC", "MHV", "UHF", or others.

Range Selector Switch: A six-position switch marked OFF, BAT, ×100, ×10, ×1, ×0.1. Turning the range selector switch from OFF to BAT provides the operator with a battery check of the instrument. A BAT check scale on the meter provides a visual means of checking the battery-charge status. Moving the range selector switch to one of the range multiplier positions (×100, ×10, ×1, ×0.1) provides the operator with an overall range of 0 to 500,000 cpm. Multiply the scale reading by the multiplier to determine the actual scale reading.

Calibration Controls: Recessed potentiometers which are used to calibrate the individual range selections and allow for high voltage adjustment from 400 to 1500 volts. A protective cover is provided to prevent tampering.

Battery Compartment: Sealed compartment to house two "D" cell batteries.

RESET Button: When depressed, this switch provides a rapid means to drive the meter to zero.

AUD ON-OFF Switch: In the ON position, operates the unimorph speaker, located on the left side of the instrument. The frequency of the clicks is relative to the rate of the incoming pulses. The higher the rate,

the higher the audio frequency. The audio should be turned OFF when not required to reduce battery drain.

Note:

A low battery condition results in a steady audio tone regardless of the position of the AUD ON-OFF switch.

F-S Toggle Switch: Provides meter response. Selecting the fast, "F" position of the toggle switch provides 90% of full scale meter deflection in four seconds. In the slow, "S" position, 90% of full scale meter deflection takes 22 seconds. In "F" position there is fast response and large meter deviation. The "S" position should be used for slow response and damped, meter deviation.

Note:

The slow response position is normally used when the instrument is displaying low numbers that require a more stable meter movement. The fast response position is used at high rate levels.

Section 5

Safety Considerations

Environmental Conditions for Normal Use

Indoor or outdoor use

No maximum altitude

Temperature range of –20°C to 50°C (–4°F to 122°F). May be certified for operation from –40°C to 65°C (–40°F to 150°F).

Maximum relative humidity of less then 95% (non-condensing)

Pollution Degree 1 (as defined by IEC 664).

Warning Markings and Symbols

Caution!

The operator or responsible body is cautioned that the protection provided by the equipment may be impaired if the equipment is used in a manner not specified by Ludlum Measurements, Inc.

The Model 3 Survey Meter is marked with the following symbols:

CAUTION, RISK OF ELECTRIC SHOCK (per ISO 3864, No. B.3.6) – designates a terminal (connector) that allows connection to a voltage exceeding 1 kV. Contact with the subject connector while the instrument is on or shortly after turning off may result in electric shock. This symbol appears on the front panel.

CAUTION (per ISO 3864, No. B.3.1) – designates hazardous live voltage and risk of electric shock. During normal use, internal components are hazardous live. This instrument must be isolated or disconnected from the hazardous live voltage before accessing the internal components. This symbol appears on the front panel. **Note the following precautions:**

Warning!

The operator is strongly cautioned to take the following precautions to avoid contact with internal hazardous live parts that are accessible using a tool:

1. Turn the instrument power OFF and remove the batteries.
2. Allow the instrument to sit for 1 minute before accessing internal components.

The "**crossed-out wheelie bin**" symbol notifies the consumer that the product is not to be mixed with unsorted municipal waste when discarding; each material must be separated. The symbol is placed on the battery compartment lid. See section 9, "Recycling" for further information.

Cleaning and Maintenance Precautions

The Model 3 may be cleaned externally with a damp cloth, using only water as the wetting agent. Do not immerse the instrument in any liquid. Observe the following precautions when cleaning or performing maintenance on the instrument:

1. Turn the instrument OFF and remove the batteries.
2. Allow the instrument to sit for 1 minute before cleaning the exterior or accessing any internal components for maintenance.

Section 6

Calibration and Maintenance

Calibration

Calibration controls are located on the front of the instrument under the calibration cover. The controls may be adjusted with a 1/8-inch blade screwdriver.

Note:

Local procedures may supersede the following

The instrument may be calibrated using Exposure Rate Calibration or CPM Calibration. Both methods are described below. Unless otherwise specified, the instrument is calibrated to Exposure Rate at the factory.

Note:

Measure High Voltage with a Model 500 Pulser or a High Impedance voltmeter with a high meg probe. If one of these instruments is not available use a voltmeter with a minimum of 1000 megohm input resistance.

Exposure Rate Calibration

Connect the input of the instrument to a negative pulse generator, such as a Ludlum Model 500 Pulser.

Caution!

The instrument input operates at a high potential. Connect the pulse generator through a 0.01μF, 3,000-volt capacitor, unless the pulse generator is already protected.

Adjust the HV control for the proper operation voltage of the detector to be used. Disconnect the Pulser and connect the detector to the instrument.

Turn the range selector switch to the ×100 position. Expose the detector to a calibrated gamma field which corresponds to approximately 80% of full-scale meter deflection. Adjust the ×100 calibration control for the proper reading.

Reposition the detector so the field corresponds to approximately 20% of full-scale meter deflection. Confirm that the meter reading is within ± 10% of the field.

Repeat this process for the ×10, ×1 and ×0.1 ranges.

If your gamma exposure range cannot calibrate two positions on each scale, the Pulser may be used to "electronically calibrate" the remaining points. Reconnect the Pulser to the instrument and determine the count rate conversion at a previous range calibration point. Then use that conversion rate to calibrate other points or scales.

If for example, you can exposure rate calibrate the 400 μR/hr point, first use the Pulser to get the count rate equivalent to the calibrated 400 μR/hr point. Then switch the Pulser "multiplier" switch to the next lower setting, and adjust the appropriate calibration control on the Model 3 for the meter to read 40 μR/hr.

CPM Calibration

Connect the input of the instrument to a negative pulse generator, such as a Ludlum Model 500 Pulser.

Caution!

The instrument input operates at a high potential. Connect the pulse generator through a 0.01μF, 3,000-volt capacitor, unless the pulse generator is already protected

Adjust the HV control for the proper operating voltage of the detector to be used. Adjust the Pulser negative pulse frequency to provide a meter

deflection of approximately 80% of full-scale on the ×100 range. Adjust the ×100 calibration control for the proper reading.

Check the 20% scale indication of the Model 3 by reducing the Pulser count rate by a factor of 4. The Model 3 should read within 10% of the actual pulse rate. Decrease the pulse rate of the Model 500 by one decade and turn the Model 3 range selector to the next lower range. Repeat the above procedure for the remaining lower ranges.

Note:

In the event that any reading is not within 10% of the true value on any scale after any of the above calibration methods is performed, a reading within 20% of true value shall be acceptable- if a calibration graph or chart is provided with the instrument. Instruments that cannot meet these criteria are defective and require repair.

Establishing an Operating Point

The operating point for the instrument and detector is established by setting the instrument high voltage (HV). The proper selection of this point is the key to instrument performance. Efficiency, background sensitivity and noise are fixed by the physical makeup of the given detector and rarely vary from unit to unit. However, the selection of the operating point makes a marked difference in the apparent contribution of these three sources of count.

In setting the operating point, the final result of the adjustment is to establish the system gain so that the desirable signal pulses (including background) are above the discrimination level and the unwanted pulses from noise are below the discrimination level and are therefore not counted. The system gain is controlled by adjusting the high voltage.

Note:

Measure the high voltage with a Ludlum Model 500 Pulser. If the Pulser does not have a high voltage readout, use a high impedance voltmeter with at least 1000 megohm input resistance to measure the high voltage.

G-M Detectors: In the special case of G-M detectors, a minimum voltage must be applied to establish the Geiger-Mueller characteristic. The output pulse height of the G-M Detector is not proportional to the energy of the detected radiation. Most G-M detectors operate at 900 volts, although some miniature detectors operate at 400-500 volts. Refer to the detector operating manual for specific recommendations. If a recommended setting is unavailable, plot a HV versus count rate curve to produce a plateau graph similar to the one displayed below. Adjust the HV for 25-50 volts above the knee or start of the plateau. For mixed detector use, the high voltage may be tailed for both, as long as the G-M detector is operated within the recommended voltage range.

Scintillators: Scintillation type detectors have a wide gain spectrum, typically 1000:1 at a single operating point. An operating voltage versus count rate curve (plateau) must be established to determine the proper operating voltage. The operating voltage is typically set above the knee of the plateau. Plot the HV versus background and source count to produce a plateau graph similar to the one in the figure below. Adjust the HV to 25-50 volts above the knee or start of the plateau. This provides the most stable operating point for the detector.

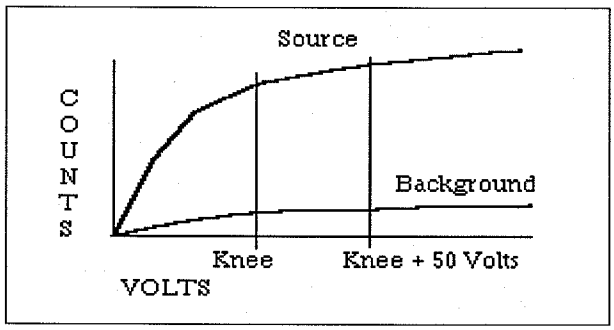

Note:

If more than one detector is to be used with the instrument and the operating voltages are different, the HV will have to be readjusted for each detector substitution.

Maintenance

Instrument maintenance consists of keeping the instrument clean and periodically checking the batteries and the calibration. The Model 3 instrument may be cleaned with a damp cloth (using only water as the

wetting agent). Do not immerse instrument in any liquid. Observe the following precautions when cleaning:

1. Turn the instrument OFF and remove the batteries.
2. Allow the instrument to sit for 1 minute before accessing internal components.

Recalibration

Recalibration should be accomplished after maintenance or adjustments have been performed on the instrument. Recalibration is not normally required following instrument cleaning, battery replacement, or detector cable replacement.

Note:

Ludlum Measurements, Inc. recommends recalibration at intervals no greater than one year. Check the appropriate regulations to determine required recalibration intervals.

Ludlum Measurements offers a full service repair and calibration department. We not only repair and calibrate our own instruments but most other manufacturer's instruments. Calibration procedures are available upon request for customers who choose to calibrate their own instruments.

Batteries

The batteries should be removed any time the instrument is placed into storage. Battery leakage may cause corrosion on the battery contacts, which must be scraped off and/or washed using a paste solution made from baking soda and water. Use a spanner wrench to unscrew the battery contact insulators, exposing the internal contacts and battery springs. Removal of the handle will facilitate access to these contacts.

Note:

Never store the instrument over 30 days without removing the batteries. Although this instrument will operate at very high ambient temperatures, battery seal failure may occur at temperatures as low as 100°F.

Section 7

Troubleshooting

Occasionally, you may encounter problems with your LMI instrument or detector that may be repaired or resolved in the field, saving turnaround time and expense in returning the instrument to us for repair. Toward that end, LMI electronics technicians offer the following tips for troubleshooting the most common problems. Where several steps are given, perform them in order until the problem is corrected. Keep in mind that with this instrument, the most common problems encountered are: (1) detector cables, (2) sticky meters, (3) battery contacts.

Note that the first troubleshooting tip is for determining whether the problem is with the electronics or with the detector. A Ludlum Model 500 Pulser is invaluable at this point, because of its ability to simultaneously check high voltage, input sensitivity or threshold, and the electronics for proper counting.

We hope these tips will prove to be helpful. As always, please call if you encounter difficulty in resolving a problem or if you have any questions.

Troubleshooting Electronics which utilize a G-M Detector or Scintillator

SYMPTOM	POSSIBLE SOLUTION
no power (or meter does not reach BAT TEST or BAT OK mark)	1. Check batteries and replace if weak. 2. Check polarity (See marks inside batter lid). Are the batteries installed backwards?

SYMPTOM	POSSIBLE SOLUTION
no power (or meter does not reach BAT TEST or BAT OK mark) (continued)	3. Check battery contacts. Clean them with rough sandpaper or use an engraver to clean the tips. 4. Remove the can and check for loose or broken wires.
nonlinear Readings	1. Check the high voltage (HV) using a Ludlum Model 500 Pulser (or equivalent). If a Multimeter is used to check the HV, ensure that one with high impedance is used, as a standard Multimeter could be damaged in this process. 2. Check for noise in the detector cable by disconnecting the detector, placing the instrument on the lowest range setting, and wiggling the cable while observing the meter face for significant changes in readings. 3. Check for "sticky" meter movement. Does the reading change when you tap the meter? Does the meter needle "stick" at any spot? 4. Check the "meter zero." Turn the power OFF. The meter should come to rest on "0".
meter goes full-scale or "pegs out"	1. Replace the detector cable to determine whether or not the cable has failed- causing excessive noise. 2. Check the HV and, if possible, the input threshold for proper setting.

SYMPTOM	POSSIBLE SOLUTION
meter goes full-scale or "pegs out" (continued)	3. Remove the can and check for loose or broken wires.
	4. Ensure that the instrument's "can" is properly attached. When attached properly, the speaker will be located on the left side of the instrument. If the can is on backwards, interference between the speaker and the input preamplifier may cause noise.
no response to radiation	1. Substitute a "known good" detector and/or cable.
	2. Has the correct operating voltage been set? Refer to the calibration certificate or detector instruction manual for correct operating voltage. If the instrument uses multiple detectors, confirm that the high voltage is matched to the current detector being used.
no audio	1. Ensure that the AUD ON-OFF switch is in the ON position.
	2. Remove the instrument housing and check the connection between the circuit board and the speaker. Plug in the 2-pin connector if necessary.

Troubleshooting G-M Detectors

1. If the tube has a thin mica window, check for window breakage. If damage is evident, the tube must be replaced.

2. Check the HV. For most G-M tubes, the voltage is normally 900 Vdc, or 460-550 Vdc for "peanut" tubes (Ludlum Model 133 series).

3. If the input sensitivity is too low, the user could see some double-pulsing.

4. Wires to the tube may be broken or the crimped connector could have a loose wire.

Troubleshooting Scintillators

1. Alpha or alpha/beta scintillators are prone to light leaks. They can be tested for this problem in a dark room or with a bright light. If a light leak is determined, changing the Mylar window assembly will usually fix the problem.

Note:

When replacing the window, make sure to use a window made with the same thickness Mylar and the same number of layers as the original window.

2. Verify that the HV and input sensitivity are correct. Alpha and gamma scintillators typically operate from 10-35 mV. High voltage varies with the photomultiplier tubes (PMT) from as low as 600 Vdc, to as high as 1400 Vdc.

3. On a gamma scintillator, visually inspect the crystal for breakage or humidity leakage. Water inside the crystal will turn it yellow and gradually degrade performance.

4. Check the PMT to see if the photocathode still exists. If the end of the PMT is clear (not brownish), this indicates a loss of vacuum which will render the PMT useless.

Section 8

Technical Theory of Operation

Low Voltage Supply

Battery voltage is coupled to U11 and associated components (a switching regulator) to provide 5 volts at pin 8 to power all logic circuits. A voltage divider (R27 and R32) located at pin 1 of U11 sets the end-of-battery–life squeal at 2.0 Vdc. Components R12 and C30 provide filtering to create +5 VA used by the amplifier and discriminator circuits.

High Voltage Supply

High voltage is developed by pulses from the switching regulator U13 to transformer T1. High voltage is multiplied by the ladder network of diodes CR3 through CR7 and capacitors C18 through C27. High voltage is coupled back through R39 to pin 8 of U13. High voltage output is set by front panel potentiometer R42, which sets the voltage feedback of 1.31 Vdc to pin 8 of U13. R38 and C28 provide filtering.

Detector Input

Detector pulses are coupled from the detector through C6 to amplifier input pin 2 of U4. CR1 protects U4 from input shorts. R37 couples the detector to the high voltage supply.

Amplifier

A self-biased amplifier provides gain in proportion to R15 divided by R14, with some gain loss due to feedback capacitor C4. A transistor (pin 3 of U4) provides amplification. U6 is configures as a constant current source to pin 3 of U4. The output self-biases to 2 Vbe (approximately 1.4 volts) at the emitter of Q1. This provides just enough bias current through pin 3 of U4 to conduct all of the current from the current source. Positive pulses from the emitter of Q1 are coupled to the discriminator.

Discriminator

Comparator U8 provides discrimination. The discriminator is set by a voltage divider (R21 and R23), coupled to pin 3 of U8. As the amplified pulses at pin 4 of U8 increase above the discriminator voltage, 5 volt negative pulses are produced at pin 1 of U8. These pulses are coupled to pin 5 of U9 for meter drive and pin 12 of U9 for audio.

Audio

Discriminator pulses are coupled to univibrator pin 12 of U9. The front panel audio ON-OFF selector controls the reset at pin 13 of U9. When ON, pulses from pin 10 of U9 turn on oscillator U12, which drives the housing-mounted unimorph speaker. Speaker tone is set by R31 and C14. Tone duration is controlled by R22 and C7.

Scale Ranging

Detector pulses from the discriminator are coupled to univibrator pin 5 of U9. For each scale, the pulse width of pin 6 of U9 is changed by a factor of 10 with the actual pulse width being controlled by the front panel switch, the analog switches U1 and U2, and the related potentiometers. This arrangement allows the same current to be delivered to C9 by 1 count on the ×0.1 range as 1000 counts on the ×100 range.

Meter Drive

Pulses from pin 6 of U9 charge capacitor C9. A constant current driver (opamp U10 and transistor Q2) delivers proportional current to the meter. For battery test (BAT TEST), the meter is directly coupled by the analog switch U3 to the batteries through resistor R8.

Meter Reset

Ratemeter reset is initiated by changing the voltage differential at C9 to zero when the RESET button is depressed.

Fast/Slow Time Constant

For the slow time constant, C17 is switched from the output of the meter drive to parallel C9.

Section 9

Recycling

Ludlum Measurements, Inc. supports the recycling of the electronics products it produces for the purpose of protecting the environment and to comply with all regional, national and international agencies that promote economically and environmentally sustainable recycling systems. To this end, Ludlum Measurements, Inc. strives to supply the consumer of its goods with information regarding reuse and recycling of the many different types of materials used in its products. With many different agencies, public and private, involved in this pursuit it becomes evident that a myriad of methods can be used in the process of recycling. Therefore, Ludlum Measurements, Inc. does not suggest one particular method over another, but simply desires to inform its consumers of the range of recyclable materials present in its products, so that the user will have flexibility in following all local and federal laws.

The following types of recyclable materials are present in Ludlum Measurements, Inc. electronics products, and should be recycled separately. The list is not all-inclusive, nor does it suggest that all materials are present in each piece of equipment:

Batteries	Glass	Aluminum and Stainless Steel
Circuit Boards	Plastics	Liquid Crystal Display (LCD)

Ludlum Measurements, Inc. products which have been placed on the market after August 13, 2005 have been labeled with a symbol recognized internationally as the "crossed-out wheelie bin" which notifies the consumer that the product is not to be mixed with unsorted municipal waste when discarding; each material must be separated. The symbol will be placed near the AC receptacle, except for portable equipment where it will be placed on the battery lid.

The symbol appears as such:

Section 10

Parts List

	Reference	Description	Part Number
Model 3 Survey Meter	UNIT	Completely Assembled Model 3 Survey Meter	48-1605
Main Board, Drawing 464 × 204	BOARD	Completely Assembled Main Circuit Board	5464-204
CAPACITORS	C1	47pF, 100V	04-5660
	C2	0.1µF, 35V	04-5755
	C3	0.0047µF, 100V	04-5669
	C4	10pF, 100V	04-5673
	C5	0.01µF, 50V	04-5664
	C6	100pF, 3KV	04-5735
	C7	0.022µF, 50V	04-5667
	C8	1µF, 16V	04-5701
	C9	10µF, 25V	04-5655
	C10	100pF, 100V	04-5661
	C11	68µF, 10V	04-5654
	C12	10µF, 25V	04-5728
	C14	470pF, 100V	04-5668
	C15	220pF, 100V	04-5674
	C16	68µF, 10V	04-5654
	C17	47µF, 10V	04-5666
	C18-C27	0.01µF, 500V	04-5696
	C28	0.001µF, 2KV	04-5703
		or 100pF, 3KV	04-5735
	C29	10µF, 25V	04-5655
	C30-C31	1µF, 16V	04-5701
	C32	470pF, 100V	04-5668

	Reference	Description	Part Number
TRANSISTORS	Q1	MMBT3904LT1	05-5841
	Q2	MMBT4403LT1	05-5842
INTEGRATED CIRCUITS	U1-U3	MAX4542ESA	06-6453
	U4-U5	CMXT3904	05-5888
	U6	CMXT3906	05-5890
	U7	MAX4541ESA	06-6452
	U8	MAX985EUK-T	06-6459
	U9	CD74HC4538M	06-6297
	U10	LMC7111BIM5X	06-6410
	U11	LT1304CS8-5	06-6434
	U12	MIC1557BM5	06-6457
	U13	LT1304CS8	06-6394
DIODES			
	CR1	CMPD2005S	07-6468
	CR2	RECTIFIER CMSH1-40M	07-6411
	CR3-CR7	CMPD2005S	07-6468
	CR9	RECTIFIER CMSH1-40M	07-6411
SWITCHES			
	SW1	D5G0206S-9802	08-6761
	SW2	TP11LTCQE	08-6770
	SW3-SW4	7101SDCQE	08-6781
POTENTIOMETERS / TRIMMERS			
	R33	250K, 64W254, ×100	09-6819
	R34	250K, 64W254, ×10	09-6819
	R35	500K, 64W504, ×1	09-6850
	R36	250K, 64W254, ×0.1	09-6819
	R42	1.2M, 3296W, HV	09-6814
RESISTORS			
	R1-R5	200K, 1/8W, 1%	12-7992
	R6	8.25K, 1/8W, 1%	12-7838
	R7	10K, 1/8W, 1%	12-7839
	R8	2.37K, 1/8W, 1%	12-7861
	R9-R11	10K, 1/8W, 1%	12-7839
	R12	200 Ohm, 1/8W, 1%	12-7846
	R13	10K, 1/8W, 1%	12-7839
	R14	4.75K, 1/8W, 1%	12-7858

	Reference	Description	Part Number
	R15	200K, 1/8W, 1%	12-7992
	R16	10K, 1/8W, 1%	12-7839
	R17	1K, 1/8W, 1%	12-7832
	R18	4.75K, 1/8W, 1%	12-7858
	R19	2K, 1/8W, 1%	12-7926
	R20-R21	100K, 1/8W, 1%	12-7834
	R22	1M, 1/8W, 1%	12-7844
	R23	2.49K, 1/8W, 1%	12-7999
	R24	14.7K, 1/8W, 1%	12-7068
	R25	200K, 1/4W, 1%	12-7992
	R26	100K, 1/4W, 1%	12-7834
	R27	68.1K, 1/8W, 1%	12-7881
	R28	100K, 1/8W, 1%	12-7834
	R29	1K, 1/8W, 1%	12-7832
	R30	100K, 1/8W, 1%	12-7834
	R31	475K, 1/8W, 1%	12-7859
	R32	100K, 1/8W, 1%	12-7834
	R37	100K, 1/8W, 1%	12-7834
	R38	2.2M, 1/8W, 1%	12-7986
	R39	500M, 3KV, 2%	12-7031
	R40	402K, 1/8W, 1%	12-7888
	R44	1K, 1/4W, 1%	12-7832
CONNECTORS			
	P1	640456-5 - MTA100	13-8057
	P2	640456-6 - MTA100 (installed as required)	13-8095
	P3	640456-2 - MTA100	13-8073
INDUCTOR	L1	22 μH	21-9808
TRANSFORMER	T1	31032R	21-9925

Wiring Diagram, Drawing 464 × 212

CONNECTORS	J1	MTA100×5, MAIN BOARD 5464-204	13-8140
	J2	OPTIONAL (M3 overload) MTA100×6, 5464-204	13-8171
	J3	MTA100×2, MAIN BOARD 5464-204	13-8178

	Reference	Description	Part Number
AUDIO			
	DS1	UNIMORPH TEC3526-PU	21-9251
BATTERIES			
	B1-B2	"D" DURACELL BATTERY	21-9313
MISCELLANEOUS			
	*	PORTABLE BATTERY CONTACT ASSEMBLY	2001-042
	*	MODEL 3 CASTING	7464-219
	*	MODEL 3 MAIN HOUSING	8464-035
	*	PORTABLE CAN ASSEMBLY (MTA)	4363-441
	*	PORTABLE KNOB	08-6613
	M1	METER ASSEMBLY METER BEZEL W/GLASS W/O SCREWS	4364-188
	*	METER MOVEMENT (1mA)	15-8030
	*	PORTABLE METER FACE	7363-136
	*	HARNESS-PORT CAN WIRES	8363-462
	*	BATTERY LID W/O LATCH KIT MODEL 3	2363-191
	*	PORTABLE LATCH KIT W/O BATTERY LID	4363-349
	*	PORTABLE HANDLE(GRIP) W/SCREWS	4363-139
	*	PORTHANDLE FOR CLIP W/SCREWS	4363-203
	*	REPLACEMENT CABLE (STD 39")	40-1004
	*	CLIP (44-3 TYPE) W/SCREWS	4002-026-01
	*	CLIP (44-6 TYPE) W/SCREWS	4010-007-01
	*	LABEL-M3 CALIBRATION	2310602
	*	LABEL-M3 BATTERY LID	2310601
	*	LABEL-M3 FACEPLATE	2310603

Section 11

Drawings and Diagrams

MAIN CIRCUIT BOARD, Drawing 464 × 204 (3 sheets)

MAIN CIRCUIT BOARD LAYOUT, Drawing 464 × 205 (2 sheets)

CHASSIS WIRING DIAGRAM, Drawing 464 × 212

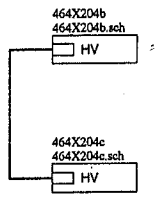

LUDLUM MEASUREMENTS, INC.			PO Box 810 501 Oak Street Sweetwater, Texas 79556 U.S.A. 1-800-622-0828		
Drawn: SA	02/08/07	Title: MAIN BOARD			
Design: DL	02/08/07	Model: M3			
Check:		Board#: 5464-204			
Approve:		Sheet: 1 of 3		Series	Sheet
14:47:19	8-Feb-2007	Rev: 2		464	204
464x204a.sch					

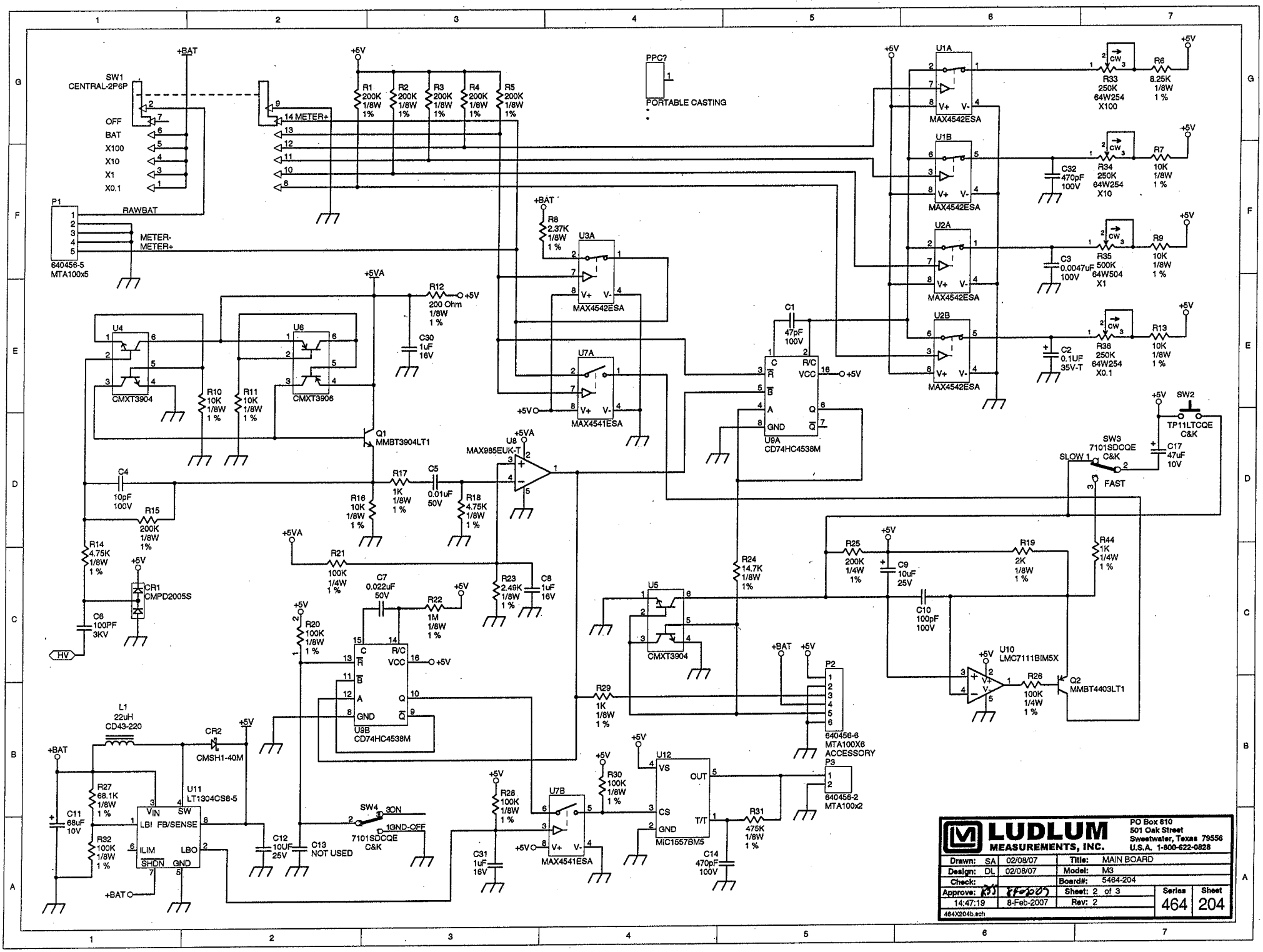
SW1
CENTRAL-2P6P
OFF
BAT
X100
X10
X1
X0.1
+BAT
+5V
R1 200K 1/8W 1%
R2 200K 1/8W 1%
R3 200K 1/8W 1%
R4 200K 1/8W 1%
R5 200K 1/8W 1%
14 METER+
PPC?
PORTABLE CASTING
P1
640456-5
MTA100x5
RAWBAT
METER-
METER+
U1A
U1B
U2A
U2B
MAX4542ESA
R33 250K 64W254 X100
R34 250K 64W254 X10
R35 500K 64W504 X1
R36 250K 64W254 X0.1
R6 8.25K 1/8W 1%
R7 10K 1/8W 1%
R9 10K 1/8W 1%
R13 10K 1/8W 1%
C32 470pF 100V
C3 0.0047uF 100V
C2 0.1UF 35V-T
R8 2.37K 1/8W 1%
U3A
U7A
MAX4541ESA
+5VA
R12 200 Ohm 1/8W 1%
C30 1uF 16V
U4
U6
CMXT3904
CMXT3906
R10 10K 1/8W 1%
R11 10K 1/8W 1%
Q1 MMBT3904LT1
C1 47pF 100V
U9A
CD74HC4538M
SW2
TP11LTCQE C&K
SW3
7101SDCQE C&K
SLOW
FAST
C17 47uF 10V
C4 10pF 100V
R15 200K 1/8W 1%
R14 4.75K 1/8W 1%
CR1 CMPD2005S
C6 100PF 3KV
HV
R16 10K 1/8W 1%
R17 1K 1/8W 1%
C5 0.01uF 50V
R18 4.75K 1/8W 1%
U8 MAX985EUK-T
R21 100K 1/4W 1%
R23 2.49K 1/8W 1%
C8 1uF 16V
C7 0.022uF 50V
R22 1M 1/8W 1%
R20 100K 1/8W 1%
U9B
CD74HC4538M
R24 14.7K 1/8W 1%
R25 200K 1/4W 1%
C9 10uF 25V
R19 2K 1/8W 1%
R44 1K 1/4W 1%
C10 100pF 100V
U5
CMXT3904
U10 LMC7111BIM5X
R26 100K 1/4W 1%
Q2 MMBT4403LT1
R29 1K 1/8W 1%
P2
640456-6
MTA100X6
ACCESSORY
P3
640456-2
MTA100x2
L1 22uH CD43-220
CR2 CMSH1-40M
R27 68.1K 1/8W 1%
R32 100K 1/8W 1%
C11 68uF 10V
U11 LT1304CS8-5
VIN SW LBI FB/SENSE ILIM LBO SHDN GND
C12 10UF 25V
C13 NOT USED
SW4
3ON
1GND-OFF
7101SDCQE C&K
R28 100K 1/8W 1%
C31 1uF 16V
U7B
MAX4541ESA
R30 100K 1/8W 1%
U12
MIC1557BM5
VS OUT CS T/T GND
R31 475K 1/8W 1%
C14 470pF 100V
LUDLUM MEASUREMENTS, INC.
PO Box 810
501 Oak Street
Sweetwater, Texas 79556
U.S.A. 1-800-622-0828
Drawn: SA 02/08/07
Design: DL 02/08/07
Check:
Approve: 8-8-2007
14:47:19 8-Feb-2007
Title: MAIN BOARD
Model: M3
Board#: 5464-204
Sheet: 2 of 3
Rev: 2
Series 464
Sheet 204
464X204b.sch

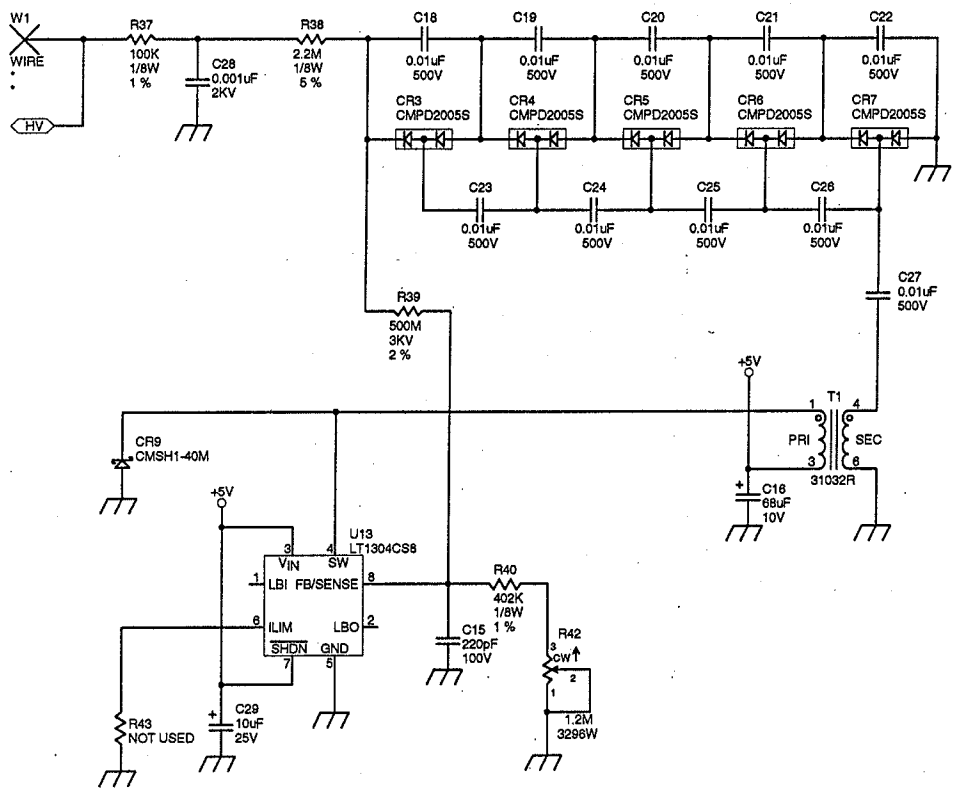

LUDLUM MEASUREMENTS, INC.			PO Box 810 501 Oak Street Sweetwater, Texas 79556 U.S.A. 1-800-622-0828		
Drawn: SA	02/08/07	Title: MAIN BOARD			
Design: DL	02/08/07	Model: M3			
Check:		Board#: 5464-204			
Approve: RJ	8Feb07	Sheet: 3 of 3		Series 464	Sheet 204
14:47:19	8-Feb-2007	Rev: 2			
464X204c.sch					

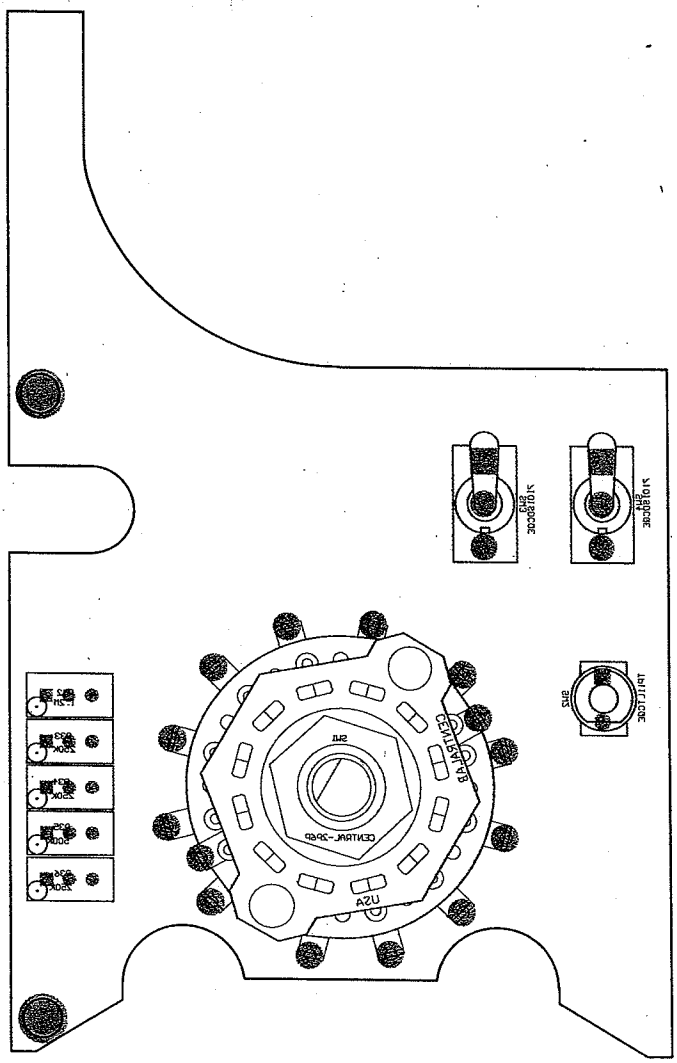

Drawn: SA	02/08/07	Title: MAIN BOARD			
Design: DL	02/08/07				
Check:		Model: M3			
Approve: RJS	8-Feb-07	Board#: 5464-204			
Layer:		Rev: 2	Series	Sheet	
	14:47:02 8-Feb-2007	SCALE: 1.21	464	205	

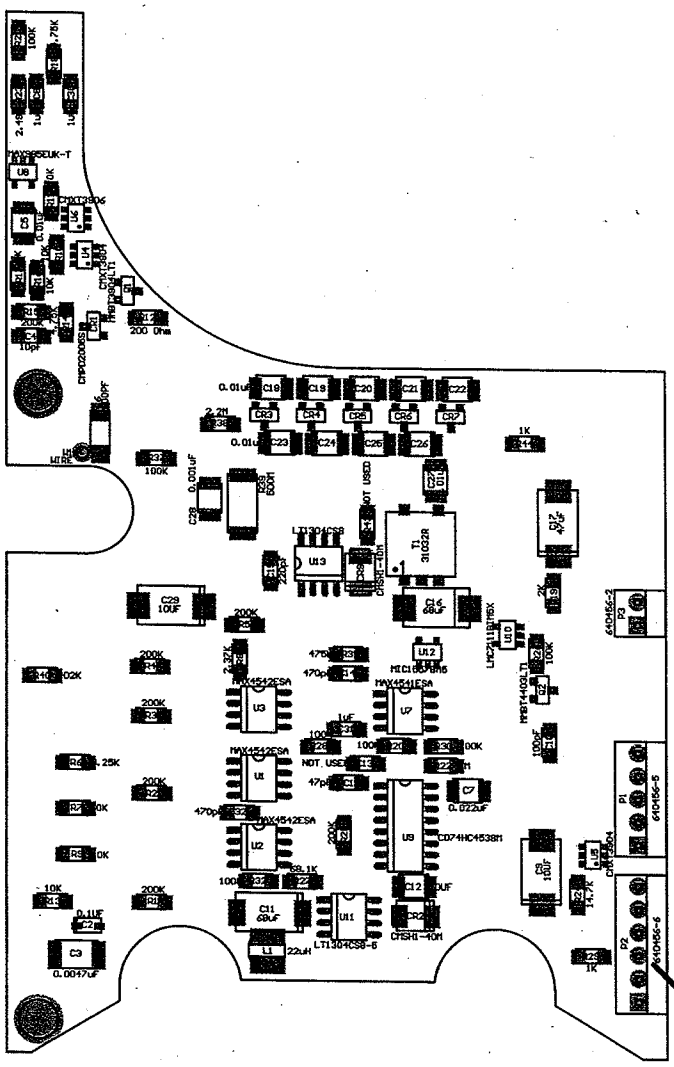

INSTALL AS REQUIRED

Drawn: SA	02/08/07	Title: MAIN BOARD			
Design: DL	02/08/07				
Check:		Model: M3			
Approve: RSS	8Feb07	Board#: 5464-204			
Layer:		Rev: 2	Series	Sheet	
	14:47:01 8-Feb-2007	SCALE: 1.21	464	205	

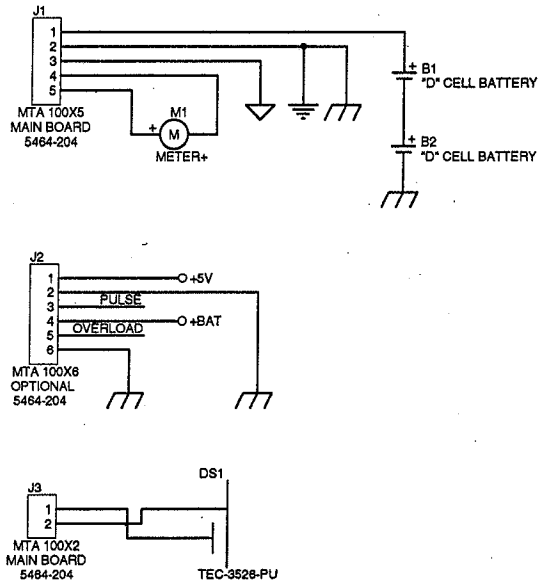

LUDLUM MEASUREMENTS, INC.

PO Box 810
501 Oak Street
Sweetwater, Texas 79556
U.S.A. 1-800-622-0828

Drawn: JK	01-JUN-094	Title: WIRING DIAGRAM	
Design: RSS	01-JUN-04	Model: M3	
		Board#: 5464-204	
Approve: JMS	01-Jun-04	Sheet: 1 of 1	Series 464 / Sheet 212
09:36:52	1-Jun-2004	Rev:	
464X212.wd			